WIRELESS ENGINEER

Vol. 32 APRIL 1955 No. 4

Decibel and Decilog

As everyone knows, the decibel is based upon a power ratio, the number of decibels being precisely defined as ten times the common logarithm of the ratio of two powers. It has proved so useful that it has found application outside the field of engineering and is being applied where the quantities involved bear no relation whatever to power. In a paper[1] advocating a new unit, the decilog, the author states that the decibel is now being employed even for such things as ratios of values of length, frequency and impedance!

This might not be very important in itself but some people are using ten times the logarithm and some are using twenty times; sometimes apparently at random, sometimes according to whether they imagine the quantities are related to power or voltage (or current). This is a serious misuse of the decibel and, as we have already mentioned, there is accordingly a move on foot to define a new unit for those cases where the decibel is inappropriate. Many names have been suggested for it, but the one which seems likely to find most favour is the decilog; this unit is so defined that the number of decilogs is ten times the logarithm of the ratio of two quantities.

If these quantities are powers, therefore, the decilog is identical with the decibel. If they are voltages, however, a given ratio represents twice as many decibels as it does decilogs. This raises a matter of importance. Complaints are often made about incorrect usage of the decibel when voltage or current ratios are involved and it might appear advantageous to abandon the decibel in such cases and adopt the decilog instead.

If we have two powers $P_1 = E_1^2/R_1 = I_1^2R_1$ and $P_2 = E_2^2/R_2 = I_2^2R_2$ then, from the definition of the decibel, the number N of decibels corresponding to the power ratio P_1/P_2 is

$$N = 10 \log (P_1/P_2) \quad \ldots \quad (1)$$

$$= 10 \log \frac{E_1^2}{R_1} \cdot \frac{R_2}{E_2^2} = 20 \log \frac{E_1}{E_2} - 10 \log \frac{R_1}{R_2}$$

$$= 10 \log \frac{I_1^2R_1}{I_2^2R_2} = 20 \log \frac{I_1}{I_2} + 10 \log \frac{R_1}{R_2}$$

When, and only when, $R_1 = R_2$

$$N = 20 \log (E_1/E_2) = 20 \log (I_1/I_2) \quad \ldots \quad (2)$$

In practice, the relations (2) are very commonly used without any regard to the proviso that the resistances must be equal. An amplifying stage of substantially infinite input impedance and moderate output impedance may develop across its output load A times the voltage that is applied to its input. It is usually said to have a gain of $20 \log A$ decibels.

As expressed above, this usage seems indefensible, and it might seem that this is a case where the decibel should be replaced by the decilog, that we should call the gain $10 \log A$ decilogs.

Let us, however, look at the question of amplifier gain from a different point of view. A multi-stage amplifier normally consists of a succession of valve stages, each having a very high input impedance and moderate output impedance, so that the output of any stage is not appreciably affected by the connection of the next. When

[1] "The Decilog," by E. I. Green, *Electrical Engineering*, July 1954 Vol. 73, p. 597.

such an amplifier is driven with a certain input, its output stage will have V volts applied to it and develop P watts in its resistive output load. If an extra stage of voltage amplification A is inserted in the amplifier without changing anything else, the output stage will have AV volts on its grid and it will develop A^2P watts in the same output load.

The inclusion of the extra stage has thus resulted in the output power rising by A^2 times and, as the value of resistance in which it is developed is unchanged, equations (2) are correct and the increase of power is certainly 20 log A decibels.

Looked at from this point of view, it is perfectly correct to express voltage amplification in decibels using equations (2) and, therefore, it would be quite wrong to use the decilog for it.

Much the same sort of thing occurs when one expresses the frequency response of an amplifier in terms of decibels. To take a simple example, suppose some source supplies a current I, independent of frequency, to a load comprising L and R in series. One may measure the power in R and express it as the ratio of the power at any given frequency to that at zero frequency. The relative response in decibels is clearly given correctly by equation (1). One may measure current, in which case one of the equations (2) applies as long as R is constant. In this case the current is independent of frequency, and so the response is constant and is zero decibels. But what if one measures the voltage across R and L?

This voltage is

$$V = IR\sqrt{1 + \omega^2L^2/R^2}$$

and most people unthinkingly write the relative response as 10 log $(1 + \omega^2L^2/R^2)$. This is certainly not the response if this is taken in connection with the power in the load circuit.

The fact of the matter is that, if one is interested in the power in the load, one is measuring the wrong quantity in this case if one measures V. One should measure the power itself or, failing this, the current. When one measures the voltage it is because one is primarily interested in the voltage because one is going to use it to drive another valve stage. This may well be a stage with a resistance load, in which power is developed proportional to the square of its grid voltage. This output power variation with frequency is correctly expressed by 10 log $(1 + \omega^2L^2/R^2)$ and a justification in terms of power is thus indirectly possible for such expressions.

By arguments along these lines it is possible to justify many, if not all, of the apparently odd and incorrect usages of the decibel which wireless people adopt. These do, in fact, prove useful and cause little confusion. We can see no reason at all for replacing the decibel by the decilog in the kind of usage that we have discussed and we think it would be most undesirable to do so; for, even if the voltages or currents with which we are concerned do not directly involve power, they usually do so indirectly. We can, in fact, see very little use for the decilog in the field of wireless, but that does not mean that it may not be very valuable elsewhere. Where there is no question at all of power being involved it would seem very desirable to use it, if only to save the decibel from misuse.

Typical of such cases is the expression of the values of ratios of things like length and frequency, but what about impedance? The author of "The Decilog" quotes this as on a par with length and frequency and implies that the decilog should be used for it. However, impedance is defined as the quotient of voltage by current and so an impedance ratio necessarily involves voltage and current ratios even if, because of the phase relations, power is not directly involved. In the way that we have shown above, however, power is usually indirectly involved, so we feel that for the expression of impedance ratios the decibel is more appropriate than the decilog.

W. T. C.

DISCRIMINATOR CIRCUIT ANALYSIS

Sensitive Asymmetrical Type

By F. L. Morris, B.Sc., A.M.I.E.E.

(Electronics Wing, M.T.D.E., R.E.M.E.)

SUMMARY.—A discriminator circuit of unconventional design is examined and the conversion efficiency calculated. The conversion efficiency is shown to compare favourably with that for the equivalent Foster–Seely type of discriminator. The circuit is simple and easily set up. It is particularly useful as an automatic frequency correction circuit or for use in portable equipment where high efficiency is the first consideration and extreme linearity over a wide frequency range is of secondary importance.

Included as an appendix is an examination of the validity of normal a.c. network theory when frequency-modulated signals are applied to linear circuits.

1. Introduction

UNLIKE the conventional phase discriminator, the circuit examined in this article does not depend for its action on the coupling between two tuned circuits.

The theory is developed on the assumption that a voltage e_0 of constant amplitude is applied to the circuit. In practice this voltage is usually obtained from the anode of a conventional limiter stage. Provided the anode circuit of the latter is sufficiently damped by a suitable resistance, the limiter output will be sensibly of constant amplitude over the frequency range of the discriminator.

For the purposes of calculation, the basic circuit is as shown in Fig. 1(a). The voltage applied is e_0 and circulation currents i_1 and i_2 are assumed to flow. The voltages e_1 and e_2 are applied to the detecting diodes and the difference in the amplitudes of these voltages, multiplied by a factor for diode efficiency, is the discriminator output. The latter is applied to the audio-frequency stages via a suitable r.f. filter.

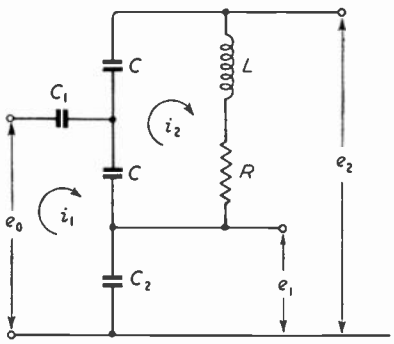

(a)

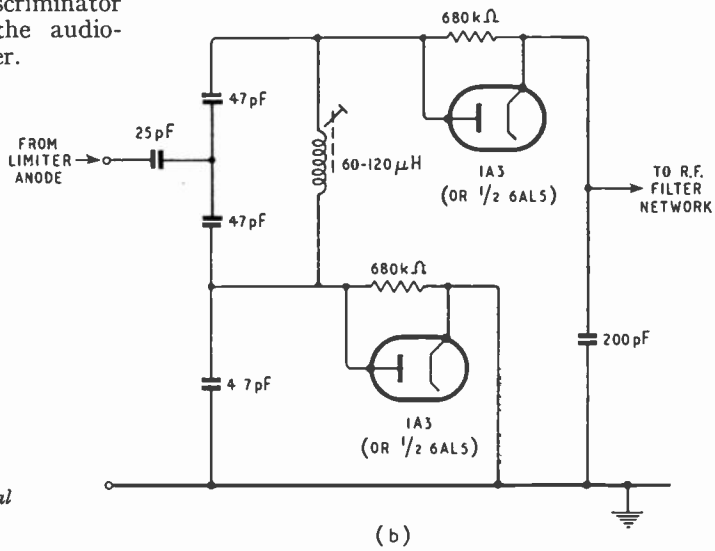

(b)

Fig. 1. *Circuit details; (a) theoretical and (b) practical circuit.*

2. Theory

Expressions for the voltages e_1 and e_2 applied to the diode are developed in Appendix 1. They are as follows:—

$$e_1 = e_0 \cdot \frac{x - j}{(Ax + a) - Aj}$$

and

$$e_2 = e_0 \cdot \frac{(x + 2a) - j}{(Ax + a) - Aj}$$

where

$$A = \left(\frac{C_2}{C_1} + 1 + \frac{C_2}{C}\right)$$

$$a = \frac{QC_2}{2C}$$

$$x = \frac{2\Delta\omega Q}{\omega_0} = \frac{2\Delta f Q}{f_0}$$

$$Q = \frac{\omega_0 L}{R} = \frac{2}{\omega_0 RC} = \text{the magnification of the tuned circuit}$$

$$\omega_0^2 = \frac{2}{LC}$$

Δf = off-tune frequency from the resonant frequency $f_0 = \omega_0/2\pi$.

The output voltage of the discriminator which

MS accepted by the Editor, May 1954, and in revised form July 1954

is applied to the r.f. filter network is proportional to the difference between the amplitudes of e_1 and e_2. It is given by:

$$E_{out} = \eta_d \{ |e_2| - |e_1| \}$$

$$= \eta_d |e_0| \left\{ \frac{|e_2| - |e_1|}{|e_0|} \right\} \quad .. \quad (1)$$

where η_d = the voltage detection efficiency of the diodes. Graphs of $|e_1| / |e_0|$ and $|e_2| / |e_0|$ as functions of the variable x are plotted in Figs. 2 and 3 respectively, for three values of a.

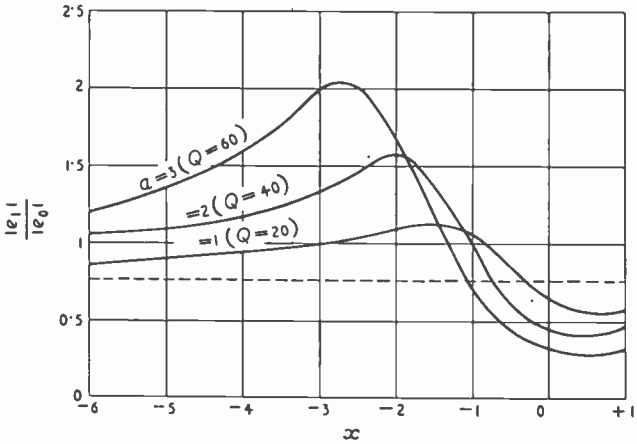

Fig. 2. *Variation of* $|e_1| / |e_0|$ *with* x.

The graph of $(|e_2| - |e_1|) / |e_0|$ against x is obtained by subtraction and is plotted in Fig. 4. It is evident that $E_{out} = 0$ when $|e_1| = |e_2|$. From the values of $|e_1|$ and $|e_2|$ deduced in Appendix 1, the condition for zero output is:

$$|e_0| \sqrt{\frac{x^2 + 1}{(Ax + a)^2 + A^2}} = |e_0| \sqrt{\frac{(x + 2a)^2 + 1}{(Ax + a)^2 + A^2}}$$

i.e., $x = -a$ .. .. (2)

Substituting the values for x and a this condition is: $\Delta f = -\frac{C_2}{4C} f_0$ .. .. .. (3)

Now the conversion efficiency at the point $x = -a$ is given by:

$$\left[\frac{dE_{out}}{d\Delta f} \right]_{x=-a} = \eta_d |e_0| \cdot \frac{d}{d\Delta f} \left[\frac{|e_2| - |e_1|}{|e_0|} \right]_{x=-a}$$

$$= \eta_d |e_0| \left[\frac{d}{dx} \left\{ \frac{\sqrt{(x + 2a)^2 + 1} - \sqrt{x^2 + 1}}{\sqrt{(Ax + a)^2 + A^2}} \right\} \cdot \frac{dx}{d\Delta f} \right]_{x=-a}$$

$$= \eta_d |e_0| \frac{2a}{\sqrt{(a^2 - 1)[a^2 (A - 1)^2 + A^2]}} \cdot \frac{2Q}{f_0}$$

$$= \frac{8\eta_d |e_0| Q}{f_0} \cdot \frac{1}{\frac{\beta}{Q} \sqrt{\left(Q^2\alpha^2 + 4\right)\left(Q^2\alpha^2 + 4\left[1 + \frac{1}{\alpha\beta}\right]^2\right)}} \quad (4)$$

$$= \frac{8\eta_d |e_0| Q}{f_0} \cdot B \quad .. \quad .. \quad (5)$$

where: $\alpha = \frac{C_2}{C} = \frac{2a}{Q}$

$$\beta = \frac{C_1 + C}{C_1} = \frac{(A - 1)}{\alpha}$$

and

$$\frac{1}{B} = \frac{\beta}{Q} \sqrt{\left(Q^2\alpha^2 + 4\right)\left(Q^2\alpha^2 + 4\left[1 + \frac{1}{\alpha\beta}\right]^2\right)}$$

$1/B$ is plotted against α in Fig. 5 for various values of Q and β. A study of Fig. 5 and equation (4) shows that for a large conversion efficiency Q should be as large as possible and β as small as possible. Q is limited by practical considerations to values of the order 20–40. The minimum value of β is 1 and occurs when $C_1 \to \infty$; i.e., when C_1 is short-circuited. However, examination of Fig. 5 indicates that provided α is correctly chosen, β can be increased to a value of, say, 3 without seriously increasing $1/B$.

The advantage of reducing the value of C_1 is that the coupling between the discriminator circuit and the previous stage is reduced, thus minimizing the loading effect of the circuit. A convenient compromise is $C_1 = \frac{1}{2}C$, corresponding to $\beta = 3$. If we select this value of β, Fig. 5 indicates that for values of Q between 20 and

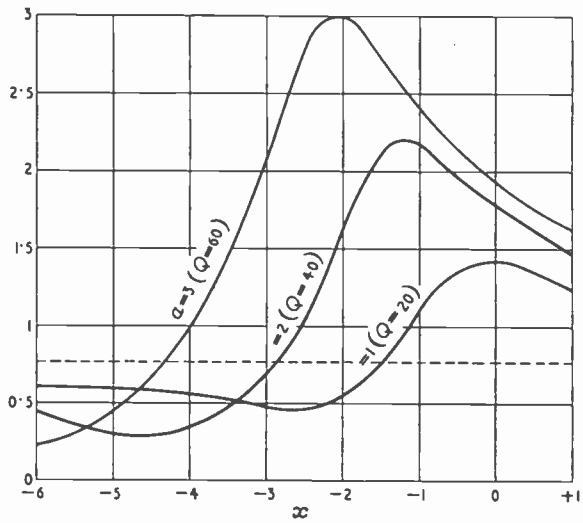

Fig. 3. *Variation of* $|e_2| / |e_0|$ *with* x.

40, $1/B$, will be minimum (i.e., B a maximum) when α is of the order 0·1; i.e., when $C_2 \approx C/10$. It is apparent that the value of α is critical. Now

$$a = \frac{QC_2}{2C} = \frac{Q}{20}, \text{ when } \frac{C_2}{C} = \frac{1}{10}.$$

Thus the curves of Figs. 2, 3 and 4 can be labelled with the appropriate values of Q.

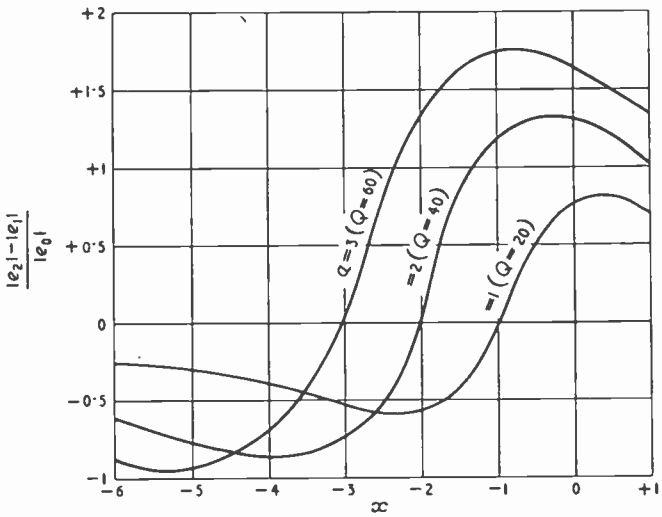

Fig. 4. *Variation of* $(|e_2| - |e_1|)/|e_0|$ *with* x.

The expression for conversion efficiency is usually given with reference to the voltage applied at the grid of the valve preceding the discriminator. If the amplitude of this voltage is $|e_g|$, equation (5) becomes:

Conversion efficiency

$$\eta_1 = \frac{8\eta_d \cdot Q\, g_m |e_g| R_L}{f_0} \cdot B \quad .. \quad (6)$$

where g_m = mutual conductance of the valve preceding the discriminator.

R_L = resonant impedance of the anode circuit of the discriminator valve (including the damping effect of the discriminator circuit and slope resistance of the valve)

$B \approx \frac{1}{3}$ from Fig. 5.

The equivalent expression for the conversion efficiency of the conventional phase discriminator has been shown to be [1]:

$$\eta_2 = \frac{2g_m |e_g| R_L \cdot \eta_d}{f_0} \cdot \frac{Q_2^2 k\sqrt{L_2/L_1}}{(1 + Q_1 Q_2 k^2)(1 + Q_2^2 k^2 L_2/4L_1)^{1/2}} \quad (7)$$

where Q_1 = magnification of the primary circuit

Q_2 = magnification of the secondary circuit

$k = M/\sqrt{L_1 L_2}$ = coupling coefficient

L_1 = primary inductance

L_2 = secondary inductance

Optimum design would appear to be

$$Q_1 k = Q_2 k = 1{\cdot}5,\ L_2/L_1 = 1{\cdot}77$$

Thus equation (7) reduces to

$$\eta_2 = \frac{2g_m |e_g| R_L \eta_d \cdot Q_2}{f_0} \left[\frac{1{\cdot}5 \times (1{\cdot}77)^{\frac{1}{2}}}{(1 + [1{\cdot}5]^2)(1 + (1{\cdot}5)^2 \times 1{\cdot}77/4)^{\frac{1}{2}}}\right]$$

$$\text{i.e., } \eta_2 = \frac{2g_m |e_g| R_L \eta_d Q_2}{f_0} \times 0{\cdot}43 \quad (8)$$

From (6) and (8)

$$\frac{\eta_1}{\eta_2} = \frac{8QB}{2Q_2 \times 0{\cdot}43} \approx 3\frac{Q}{Q_2}$$

Thus for circuits with comparable magnifications $\eta_1/\eta_2 \approx 3$.

3. Practical Application

The design of a discriminator circuit to work at a frequency of 3 Mc/s will be considered. The tuned circuit should have the highest Q possible and the tuning capacitor C should not be too small or difficulty will be experienced with stray capacitances when choosing a value of $C_2 = C/10$.

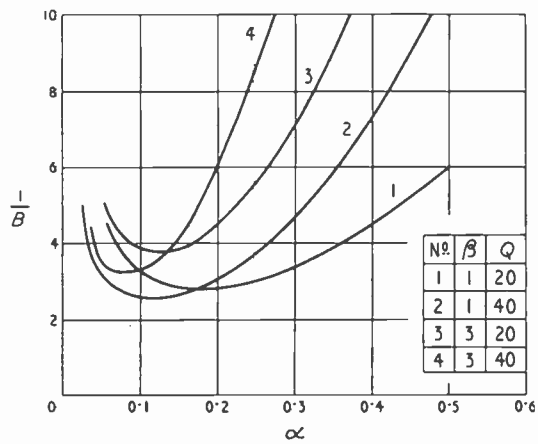

Fig. 5. *Variation of* $1/B$ *with* α.

A convenient tuned circuit comprises an iron-dust cored inductance variable over the range 60–120 μH and two 47-pF capacitors connected in series across the coil. Thus $C_2 = 4{\cdot}7$ pF and for $\beta = 3$, $C_1 = 25$ pF. These values are shown in Fig. 1(b).

From equation (3) $\Delta f = -f_0/40$. Calling this value of Δf, Δf_0, we see that Δf_0, the cross-over point, is independent of the Q of the tuned circuit. Further in the circuit under

discussion this cross-over is to be at 3 Mc/s, so

$$f_0 + \Delta f_0 = 3{\cdot}000 \text{ Mc/s}$$
$$f_0\,(1 - 1/40) = 3{\cdot}000 \text{ Mc/s}$$
$$\therefore f_0 = \frac{40}{39} \times 3 \text{ Mc/s} = 3{\cdot}078 \text{ Mc/s}$$

Thus when the discriminator is correctly adjusted for zero output at 3 Mc/s, the tuned circuit is actually tuned to a frequency 78 kc/s above this frequency.

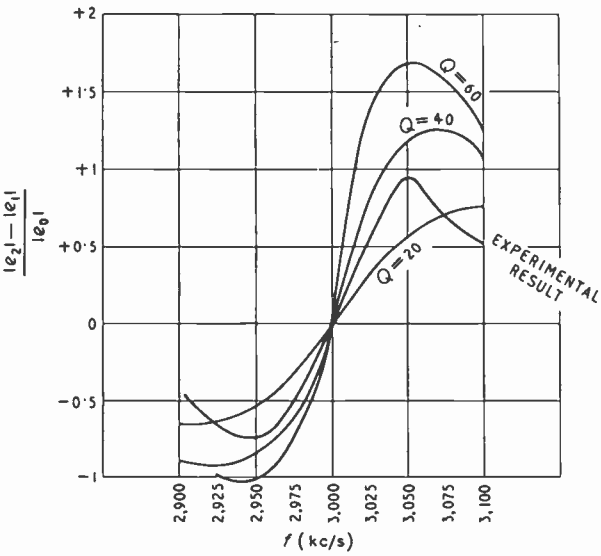

Fig. 6. *Variation of* $(|e_2| - |e_1|)/|e_0|$ *with* f.

In Fig. 6 the curves in Fig. 4 are redrawn with x reduced to a frequency scale by means of the relationship $x = 2\Delta fQ/f_0$. The main characteristics of the curves are as follows:

(a) The curves are asymmetrical about the f-axis, the positive portion being of greater amplitude than the negative.
(b) The peaks occur from 50–100 kc/s from the cross-over point, depending on the Q of the circuit.
(c) The curves are approximately linear between positive and negative peaks.
(d) The slopes of the straight portions of the curves increase with increase of Q.
(e) The amplitudes of the curves increase with increase of Q.

Setting up the circuit is simple. With a 3-Mc/s signal applied to the grid of the limiter, the discriminator inductance is tuned to give zero output as measured on a balanced valve-voltmeter. The tuning is then slightly adjusted to give a small positive or negative reading. The limiter anode is then tuned to give maximum indication. Finally, the discriminator is tuned back to zero output.

4. Experimental Results

A signal of 1·13 V peak was injected from a signal generator into the grid of the limiter valve. The amplitude of the resulting signal at the anode (i.e., the input e_0 to the discriminator circuit), was 7·5 V peak. The variation of discriminator output with change of frequency was noted, using a balanced valve voltmeter. A diode efficiency of 0·85 was assumed. The discriminator output divided by 7·5 × 0·85 is plotted in Fig. 5, marked 'Experimental Result', and is to the same scale as the calculated curves. It will be seen that the experimental curve has the same characteristics as the calculated curves and corresponds to a calculated curve with a Q of about 30. The experimental curve falls off more rapidly than the calculated curves beyond 50 kc/s from cross-over, because the assumption that e_0 is constant is then no longer true. The value of e_0 diminishes rapidly with increase or decrease of frequency beyond 50 kc/s from cross-over.

Actually, it was found that when e_0 was plotted against frequency, for a fixed input to the grid of the limiter valve, the resulting curve was double-humped. The main effect of the double humping is slightly to increase the slope of the curves calculated for a constant e_0. Double humping is to be expected as the effective anode load of the limiter is comprised of two tuned circuits capacitively coupled.

The conversion efficiency as calculated from data given above is 0·14 V per 1 kc/s off-tune per 1 V peak input to the limiter grid.

5. Conclusions

This unconventional circuit is simple to construct and set up. It gives a conversion efficiency which compares favourably with that for the conventional Foster–Seely phase discriminator. However, the discriminator characteristic is asymmetrical and it is not linear over a wide frequency range.

The asymmetry of the characteristic could be overcome to some extent by:

(a) peaking the limiter at a frequency below the cross-over frequency

or

(b) adjusting the cross-over frequency to a point midway between the positive and negative peaks.

The circuit is useful for automatic frequency correction, where linearity is not of major importance. Its main use is in mobile communication equipment where size and weight must be kept to a minimum and high output fidelity is a secondary consideration.

REFERENCE

[1] "The Phase Discriminator", K. R. Sturley, *Wireless Engineer*, February 1944, p. 75.

APPENDIX 1

Expressions for the voltages applied to the diode detectors.

Basic Equations

Application of Kirchhoff's laws to the circuit of Fig. 1(a) gives the following equations:

$$e_0 = \frac{1}{j\omega}\left(\frac{1}{C_1} + \frac{1}{C} + \frac{1}{C_2}\right) i_1 - \frac{1}{j\omega C} i_2 \quad \ldots \quad (1.1)$$

$$0 = \frac{1}{j\omega C} i_1 - \left[R + j\left(\omega L - \frac{2}{\omega C}\right)\right] i_2 \quad \ldots \quad (1.2)$$

$$e_1 = \frac{1}{j\omega C_2} i_1 \quad \ldots \quad (1.3)$$

$$e_2 = e_1 + (R + j\omega L)\, i_2 \quad \ldots \quad (1.4)$$

Evaluation of e_1

Eliminating i_2 from equations (1.1) and (1.4), using equation (1.2), gives:

$$e_0 = \frac{1}{j\omega}\left\{\left(\frac{1}{C_1} + \frac{1}{C} + \frac{1}{C_2}\right) - \frac{1}{j\omega C^2\left[R + j\left(\omega L - \frac{2}{\omega C}\right)\right]}\right\} i_1 \quad \ldots \quad (1.5)$$

$$e_2 = e_1 + \frac{(R + j\omega L)}{j\omega C\left[R + j\left(\omega L - \frac{2}{\omega C}\right)\right]} i_1 \quad \ldots \quad (1.6)$$

Eliminating i_1 from equations (1.3) and (1.4) gives:

$$e_1 = \frac{e_0}{\left(\frac{C_2}{C_1} + 1 + \frac{C_2}{C}\right) + \frac{C_2}{2C\,[(\omega^2 LC/2 - 1) - j\omega RC/2]}}$$

$$= \frac{e_0}{A + \frac{a}{Q\left[\left(1 + \frac{\Delta\omega}{\omega_0}\right)^2 - 1\right] - j}}$$

where: $A = \left(\frac{C_2}{C_1} + 1 + \frac{C_2}{C}\right)$

$$\omega_0^2 = \frac{2}{LC}$$

$$Q = \frac{2}{\omega RC} \approx \frac{2}{\omega_0 RC}$$

$$a = \frac{QC_2}{2C}$$

$$\omega = \omega_0 + \Delta\omega$$

Since $\Delta\omega \ll \omega_0$

$$e_1 \approx \frac{e_0}{A + \frac{a}{2\frac{\Delta\omega}{\omega_0} Q - j}}$$

i.e., $$e_1 = e_0 \cdot \frac{x - j}{(Ax + a) - Aj} \quad \ldots \quad (1.7)$$

where: $x = \frac{2\Delta\omega}{\omega_0} Q = \frac{2\Delta f Q}{f_0}$

$$\therefore |e_1| = |e_0| \sqrt{\frac{x^2 + 1}{(Ax + a)^2 + A^2}} \quad \ldots \quad (1.8)$$

In equation (1.8), which gives the amplitude of e_1 in terms of the amplitude of e_0 and the circuit parameters, a and A are constant and x is proportional to the change in frequency Δf.

Differentiating equation (1.8) with respect to x shows that $|e_1|$ has a maximum value given by

$$x = -\left[\frac{a + \sqrt{a^2 + 4A^2}}{2A}\right]$$

and a minimum value given by

$$x = +\left[\frac{\sqrt{a^2 + 4A^2} - a}{2A}\right]$$

Substituting in equation (1.8) gives:

$$|e_1|_{max} = \frac{|e_0|}{A}\sqrt{\frac{\sqrt{a^2 + 4A^2} + a}{\sqrt{a^2 + 4A^2} - a}}$$

$$|e_1|_{min} = \frac{|e_0|}{A}\sqrt{\frac{\sqrt{a^2 + 4A^2} - a}{\sqrt{a^2 + 4A^2} + a}}$$

The graphs in Fig. 2 are based on the above equations with $A = 1{\cdot}3$.

The curves are asymptotic to the dotted line corresponding to $1/A = 0{\cdot}77$.

Evaluation of e_2

From the equations (1.3) and (1.6), eliminating i_1 we get:

$$e_2 = e_1\left[1 + \frac{C_2(R + j\omega L)}{C\left[R + j\left(\omega L - \frac{2}{\omega C}\right)\right]}\right]$$

$$\approx e_1\left[1 + \frac{j\omega LC_2}{C\left[R + j\left(\omega L - \frac{2}{\omega C}\right)\right]}\right]$$

Since $R \ll \omega L$ over the frequency range considered.

If $Q = \frac{\omega L}{R} \approx \frac{\omega_0 L}{R} = \frac{2}{\omega_0 LC}$

$$e_2 = e_1\left[1 + \frac{jC_2}{C\left[1/Q + j\left(1 - \frac{2}{\omega^2 LC}\right)\right]}\right]$$

$$= e_1\left[1 + \frac{2ja}{1 + jQ\left(1 - \frac{\omega_0^2}{\omega^2}\right)}\right]$$

$$= e_1\left[1 + \frac{2a}{x - j}\right]$$

i.e., $$e_2 = e_1 \frac{(x + 2a) - j}{x - j} \quad \ldots \quad (1.9)$$

From equations (1.7) and (1.9), eliminating e_1 we get:

$$e_2 = e_0 \frac{(x + 2a) - j}{(Ax + a) - Aj} \quad \ldots \quad (1.10)$$

and $$|e_2| = |e_0| \sqrt{\frac{(x + 2a)^2 + 1}{(Ax + a)^2 + A^2}} \quad \ldots \quad (1.11)$$

Differentiating equation (1.11) with respect to x shows that $|e_2|$ has a maximum value given by

$$x = \frac{-a(1 + 2A) + \sqrt{a^2(1 + 2A)^2 - 4A(2a^2 - A)}}{2A}$$

and a minimum value given by

$$x = \frac{-a(1 + 2A) - \sqrt{a^2(1 + 2A)^2 - 4A(2a^2 - A)}}{2A}$$

The corresponding values of $|e_2|$ are:

$$|e_2|_{max} = \frac{|e_0|}{A}\sqrt{\frac{\sqrt{a^2(1 + 2A)^2 - 4A(2a^2 - A)} + a(2A - 1)}{\sqrt{a^2(1 + 2A)^2 - 4A(2a^2 - A)} - a(2A - 1)}}$$

$$|e_2|_{min} = \frac{|e_0|}{A}\sqrt{\frac{\sqrt{a^2(1 + 2A)^2 - 4A(2a^2 - A)} - a(2A - 1)}{\sqrt{a^2(1 + 2A)^2 - 4A(2a^2 - A)} + a(2A - 1)}}$$

The graphs in Fig. 3 are based on the above equations with $A = 1{\cdot}3$. The curves are asymptotic to the dotted line corresponding to $1/A = 0{\cdot}77$.

(Appendix 2 is overleaf)

APPENDIX 2 *

Examination of the validity of normal a.c.-network calculations when frequency-modulated signals are applied to linear circuits.

Consider the circuit shown in Fig. 7 where a voltage signal v is applied to a four-terminal network resulting in a current i_n flowing in a load represented by Z. Linear circuit elements are assumed, and steady-state solutions only are considered.

Fig. 7.

The expression for the current i_n in terms of v and the circuit parameters is obtained by solving the set of simultaneous equations which are the result of the application of Kirchhoff's Laws to the network. It will be of the form:

$$F(D).\, i_n = \Phi(D).\, v \qquad \ldots \qquad (2.1)$$

where both $F(D)$ and $\Phi(D)$ are of the form:

$$[a_n D^n + a_{n-1} D^{n-1} + \ldots + a_1 D^1 + a_0 + b_1 D^{-1} + \ldots + b_{m-1} D^{-m+1} + b_m D^{-m}]$$

where $D \equiv d/dt$ and $D^{-1} \equiv \int^t dt$ and the coefficients are constants.

Provided we restrict our considerations to voltages having the vector form $v = V_0\, e^{j\omega t}$ where V_0 and ω are independent of t, the operator D can be replaced by $j\omega$ and D^{-1} by $1/j\omega$. Equation (2.1) then reduces to

$$\begin{aligned} i_n &= \frac{\Phi\,[j\omega]}{F\,[j\omega]}\, V_0 e^{j\omega t} \\ &= (A + jB)\, V_0 e^{j\omega t} \\ &= V_0 \sqrt{A^2 + B^2}\, e^{j(\omega t + \phi)} \end{aligned}$$

where $\phi = \tan^{-1} \dfrac{B}{A}$

However, if the applied voltage is of the vector form $v = V_0 e^{jf(t)}$ there is in general no simple substitution for the operator D.

If $v = V_0 e^{jf(t)}$, we have:

$$\left.\begin{aligned} D.\, v &\equiv jvf'(t) & D^{-1}\left\{1 - \frac{jf''(t)}{[jf'(t)]^2}\right\} v &\equiv \frac{v}{jf'(t)} \\ D^2.\, v &\equiv v\{[jf'(t)]^2 + jf''(t)\} & D^{-2}\left\{\frac{1}{jf'(t)} - \frac{2jf''(t)}{[jf'(t)]^3}\right\} v &\equiv \frac{v}{[jf'(t)]^2} \\ &\ldots\ldots\ldots\ldots & &\ldots\ldots\ldots\ldots \\ D^n.\, v &\equiv v\,\{D + jf'(t)\}.1 & D^{-m}\left\{\frac{1}{[jf'(t)]^{m-1}} - \frac{mjf''(t)}{[jf'(t)]^{m+1}}\right\} v &\equiv \frac{v}{[jf'(t)]^m} \end{aligned}\right\} \quad (2.2)$$

If $f(t) = [\omega_c t + (\omega_d/\omega_m), \sin \omega_m t]$, v has the vector form of a frequency-modulated waveform and:

$$\left.\begin{aligned} f'(t) &= (\omega_c + \omega_d \cos \omega_m t) \\ f''(t) &= -\,\omega_d \omega_m \sin \omega_m t \\ f'''(t) &= -\,\omega_d \omega_m^2 \cos \omega_m t \\ f^{iv}(t) &= \omega_d \omega_m^3 \sin \omega_m t, \text{ etc.} \end{aligned}\right\} \qquad \ldots \qquad (2.3)$$

Fortunately, in practice $\omega_m \ll \omega_c$ and $\omega_d \ll \omega_c$. Thus ω_m and ω_d can be considered to be of the first order of small quantities compared with ω_c. Now all operations with the operator D upon $f'(t)$ produce terms of the second or higher order of small quantities as is evident from consideration of the equations (2.3) above.

Hence equations (2.2) simplify to:

$$D^n.\, v \equiv v\,[jf'(t)]^n \quad \text{and} \quad D^{-m}.\, v \equiv v\left\{\frac{1}{[jf'(t)]^m}\right\}$$

Reverting to equation (2.1)

If $v = V_0 \exp.\left\{j\left(\omega_c t + \dfrac{\omega_d}{\omega_m} \sin \omega_m t\right)\right\}$

and $\omega_d \ll \omega_c$, $\omega_m \ll \omega_c$,

$$F(D).\, i_n = \Phi\,[jf'(t)]\, v \qquad \ldots \qquad (2.4)$$

Suppose now that $i_n = \Psi[jf'(t)]\, v \qquad \ldots \qquad (2.5)$

Then $F(D).\, i_n = F\,[jf'(t)].\, \Psi\,[jf'(t)]\, v$ + terms involving $f''(t)$ and higher derivatives.

If we neglect the terms involving $f''(t)$ and higher derivatives on the grounds that these terms involve the second and higher orders of small quantities we have:

$F(D).\, i_n = F[jf'(t)].\, \Psi\,[jf'(t)]\, v$

i.e., $F\,[jf'(t)].\, \Psi\,[jf'(t)\, v = \Phi\,[jf'(t)]\, v$, from (2.4)

i.e., $\Psi\,[jf'(t)]\, v = \dfrac{\Phi\,[jf'(t)]}{F\,[jf'(t)]}\, v = i_n$, from (2.5)

We can thus replace the operators D^n and D^{-m} wherever they occur by $[jf'(t)]^n$ and $[1/jf'(t)]^m$ respectively; i.e., $F(D)$ and $\Phi\,(D)$ by $F\,[jf'(t)]$ and $\Phi\,[jf'(t)]$. The result is the same as if ω in the simple analysis is replaced by $(\omega_c + \omega_d \cos \omega_m t)$; i.e., by $\omega_c + \Delta\omega$ where $\Delta\omega = \omega_d \cos \omega_m t$.

This is the method adopted in the analysis in this article.

The analysis in this Appendix is not intended to be mathematically rigid, but merely to indicate the approximations involved when simple a.c. network theory is used to solve problems involving frequency-modulated voltages and currents. For complete rigor, each network problem must be examined as a special case. In general, numerical analysis will have to be resorted to in order to solve the differential equations. The work involved would seldom be justified when the simple analysis leads to the same answer within the limits of experimental accuracy.

*The author wishes to thank Dr. P. Samet of R.R.E., Malvern, Worcs for his suggestion that an examination of the validity of normal a.c. network theory be included.

VISUAL IMPEDANCE-MATCHING EQUIPMENT

For 80—250 M/cs

By R. Dalziel, M.A., A.M.I.E.E. and A. Challands

SUMMARY.—Electromagnetic energy is often transferred from a source to a load via a cable, as for instance when an aerial is fed from a transmitter. This paper describes an instrument which displays in one cathode-ray tube picture the degree of match of the load to the cable over the frequency band 80 Mc/s to 250 Mc/s. The method employs frequency sweeping, the test oscillator being mechanically swept over the above frequency range. The instrument has been used to measure impedances and has given values which agree well with those obtained by other means.

Introduction

THE design of very wideband aerials is largely empirical, guidance being provided by the theoretical work of Schelkunoff[1], Papas and King[2], and others. This means that experimental adjustments have to be made in order that the impedance of the aerial shall match the impedance of the feeder cable over the frequency band within which the aerial has to transmit or receive. An adjustment which improves the match at one frequency might worsen it at another. It is therefore desirable to have a simultaneous indication of matching at all frequencies or, at least, at a large number of frequencies. This implies that the method to be adopted should employ frequency modulation. Laboratory apparatus that affords a simultaneous visual display of matching over a frequency band of 30 Mc/s maximum in the range 10 Mc/s to 250 Mc/s has been described by Libby[3]. A similar type of equipment which displays a 40-Mc/s band has been demonstrated at a Physical Society's Exhibition[4], the range in this case being 40–600 Mc/s. Both these systems obtain a frequency-modulated test signal by beating the output of two klystron oscillators, one of fixed frequency and one of varying frequency. The impedance under test is connected to the end of a long cable and a voltage proportional to that reflected from the cable termination is displayed on a cathode-ray oscilloscope. In ref. 3 an analogy is drawn with the f.m. aircraft altimeter. No indication is given of the accuracy of the method and no results are quoted.

When very wideband aerials are being investigated a frequency scan of 30 Mc/s is not enough and changing the mean frequency step by step is not a rapid process when beating klystrons are used. The equipment which is described in the present paper has a cathode-ray oscilloscope display of matching over the frequency band 80 Mc/s to 250 Mc/s, the whole range being scanned by the test signal in one sweep. The face of the oscilloscope is calibrated in terms of standing-wave ratio (s.w.r.) and the degree of match can be read at a glance. The magnitude and source of any undesired reflections can also be determined; e.g., a badly designed or faulty cable connector. By making more accurate measurements the impedance of the load can be deduced. In the next section the operation of the instrument is described in terms of transmission-line theory and the important design factors are evolved. Attention has been paid to these factors in the design, and the accuracy achieved is indicated by results.

MS accepted by the Editor, May 1954

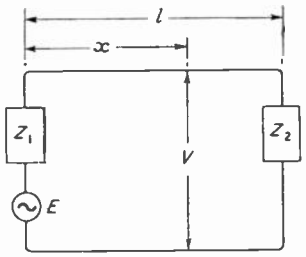

Fig. 1. *Generator feeding a load Z_2 through a transmission line.*

Principle of Operation

Suppose that we have a generator of e.m.f. E and internal impedance Z_1 and that power has to be transmitted from this generator along a cable of length l to a load of impedance Z_2 (Fig. 1). Let us assume that the cable is lossless with a characteristic impedance Z_0 and propagation constant $j\beta = j2\pi/\lambda$ where λ is the wavelength in the cable.

The reflection coefficient ρ_1 at the input end of the cable is $\dfrac{Z_0 - Z_1}{Z_0 + Z_1}$ and that at the output end ρ_2 is $\dfrac{Z_0 - Z_2}{Z_0 + Z_2}$. The voltage V at a distance x from the generator is given[5] by the expression,

$$\frac{Z_0 E}{Z_0 + Z_1} \cdot \frac{e^{-j\beta x} - \rho_2 e^{-j\beta(2l-x)}}{1 - \rho_1 \rho_2 e^{-2j\beta}} \quad \ldots \quad \ldots \quad (1)$$

Apart from the factor $Z_0 E$, the numerator of

(1) represents the variation along the cable of the sum of two voltage waves, one of magnitude unity travelling from the generator to the load and the other of magnitude $|\rho_2|$ travelling in the reverse direction. The denominator is independent of the distance x along the cable. These two waves produce an interference pattern and it is standard practice to measure the standing-wave ratio by sliding a detector probe along a slotted section of line connected to the cable. The detector measures the maximum and minimum values of V. Since both the denominator and the factor $Z_0 E$ in the numerator are independent of x they appear only as scale factors on the voltage measurements and they cancel out when calculating the s.w.r.

A more complicated situation arises when x is kept constant and the generator frequency is varied. We still have voltage waves travelling in both directions in the cable but the denominator in expression (1) is no longer constant since ρ_1, ρ_2, β and probably Z_1 all vary with frequency. In the numerator, E might also vary with frequency. Under these conditions the voltage V at a fixed distance x plotted as a function of frequency has no very clear meaning. We can, however, make the denominator completely independent of frequency by choosing the generator internal impedance Z_1 to be equal to the characteristic impedance of the cable at all frequencies; i.e., $Z_1 \equiv Z_0$. This condition makes $\rho_1 \equiv 0$ and expression (1) again takes the simple form of two interfering voltage waves. We can now measure the voltage at a fixed position x and effectively move the interference pattern past this point by varying the frequency of the generator. For convenience x is taken to have the value zero and expression (1) assumes a simple form giving

$$V = \frac{E}{2}\left[1 - \rho_2\, e^{-j4\pi l/\lambda}\right] \quad \ldots \quad \ldots \quad (2)$$

where ρ_2 is a function of λ. E is constant by suitable circuit design. For clarity of exposition we shall assume in the first place that ρ_2 is real and constant. The second bracketed term on the right-hand side of (2) consists of a vector of magnitude ρ_2 which, as λ varies, rotates round the unit vector. The vector sum consequently has a maximum value $1 + \rho_2$ when the two vectors are in phase, and a minimum value $1 - \rho_2$ when they are in anti-phase. That is to say,

$$V_{max} = \frac{E}{2}\left[1 + \rho_2\right] \quad \ldots \quad \ldots \quad \ldots \quad (3)$$

and $$V_{min} = \frac{E}{2}\left[1 - \rho_2\right] \quad \ldots \quad \ldots \quad \ldots \quad (4)$$

As λ is varied, the right-hand side of (2) therefore passes through a series of maximum and minimum values given by (3) and (4).

When the load is matched to the cable so that $\rho_2 = 0$, then V has a constant value given by

$$V_{matched} = \frac{E}{2} \quad \ldots \quad \ldots \quad \ldots \quad (5)$$

The s.w.r. is obtained by dividing (3) by (4), thus,

$$\text{s.w.r.} = \frac{1 + \rho_2}{1 - \rho_2} \quad \ldots \quad \ldots \quad \ldots \quad (6)$$

For a given s.w.r., equation (6) determines ρ_2, and V_{max} and V_{min} can then be deduced from ρ_2 and E, using (3) and (4). These voltage levels can be marked on the cathode-ray oscilloscope display as an s.w.r. calibration.

The frequencies at which maxima occur are those for which there is an even number of half-wavelengths in twice the length of the cable, and minima occur at those frequencies for which there is an odd number of half-wavelengths in twice the length of the cable. The frequency-resolving power can be defined as the smallest difference between two frequencies at which V has a turning value, and it depends entirely on the electrical length of the cable. It is given by

$$f' - f'' = v\left(\frac{1}{\lambda'} - \frac{1}{\lambda''}\right) = v\left(\frac{n}{2l} - \frac{2n-1}{4l}\right) = \frac{v}{4l} \quad \ldots \quad \ldots \quad \ldots \quad \ldots \quad \ldots \quad (7)$$

where f' is a frequency at which a maximum occurs and f'' is the next lower frequency at which a minimum occurs. v is the velocity of electromagnetic waves in the cable and n is the number of half-wavelengths in the length l at frequency f'.

The most convenient cable is a conventional flexible co-axial type, for example, Uni-radio No. 1 which has a solid polyethylene dielectric. For this cable $v = 0{\cdot}66c$ where c is the free-space velocity of light. A length of 10 metres gives a resolving power of 5 Mc/s so that 34 maxima and minima occur in a frequency range of 170 Mc/s and 17 complete waves appear on the display to be described later.

As a next step let us suppose that $|\rho_2|$ is independent of frequency but that the phase of ρ_2 is a function of frequency. Maxima and minima still occur when the constituent voltages in equation (2) are in phase and in anti-phase respectively and they have the same magnitudes if $|\rho_2|$ is as before. The contribution of the phase of ρ_2 to the total phase of the rotating vector is small compared with the contribution from the electrical length of the cable so that the oscillating behaviour of V is broadly as before. However, the turning values now occur at frequencies which are displaced above or below their previous values according to the sign of the reactance of the load at those frequencies. Equation (7) is

now in error by an amount which depends on the rate of change of the phase of ρ_2 with frequency in the region of f' and f'', but this is unimportant since the right-hand side of (7) still determines the length l which will yield the required number of maxima and minima in the total frequency range.

The most general case is when ρ_2 varies in modulus and in phase. In order that maxima and minima of V shall still occur when the two vectors in (2) are in phase and in anti-phase respectively, we must specify that $|\rho_2|$ varies much more slowly with frequency than does the relative phase of the two vectors, which phase is of course made up of the electrical length of the cable and the phase of ρ_2. It is safe to assume that this condition is met in practice when power is being transferred to a load over a very wide band of frequencies. We still have equations of the form of (3) and (4) and they are

$$V_{max} = \frac{E}{2}\left[1 + |\rho_2|_{\lambda'}\right] \quad .. \quad .. \quad (3a)$$

and $$V_{min} = \frac{E}{2}\left[1 - |\rho_2|_{\lambda''}\right] \quad .. \quad .. \quad (4a)$$

where in (3a) the function $|\rho_2|_{\lambda'}$, has a value corresponding to a wavelength λ' at which a maximum occurs and in (4a) $|\rho_2|_{\lambda''}$ has a value corresponding to a wavelength λ'' at which a minimum occurs. Equation (5) holds at λ' and λ''.

From (3a) and (5) we can calculate $|\rho_2|$ at λ' and the s.w.r. at λ' can be evaluated from the expression

$$\text{s.w.r.} = \frac{1 + |\rho_2|_{\lambda'}}{1 - |\rho_2|_{\lambda'}} \quad (6a)$$

The s.w.r. at λ'' can be calculated similarly using formulae (4a) and (5).

Previous statements concerning s.w.r. calibration and frequency-resolving power still apply.

Although a loss-less cable is desirable, in practice there is usually some attenuation and the effect of this will now be discussed. Consider the 10-metre length of Uni-radio No. 1. From manufacturers' data, the total go and return attenuation is 1·9 db at the high-frequency end of the band, corresponding to a voltage ratio of 0·8. It can be shown from this that an s.w.r. of 2:1 on a loss-less cable would appear as 1·8:1 on this cable. For engineering applications this difference does not spoil the value of the display. At lower frequencies the attenuation is less. The effect of attenuation on the visual display is most apparent when $|\rho_2| = 1$. In this case the V_{min} fail to reach zero by an amount which depends on the attenuation and which can be measured if desired to yield attenuation data.

In calculations and calibration the attenuation can be included, since formulae (3a) and (4a) become for the above cable at the highest frequency,

$$V_{max} = \frac{E}{2}\left[1 + 0{\cdot}8\,|\rho_2|\right] \quad .. \quad .. \quad (3b)$$

$$V_{min} = \frac{E}{2}\left[1 - 0{\cdot}8\,|\rho_2|\right] \quad .. \quad .. \quad (4b)$$

and equation (5) remains as

$$V_{matched} = \frac{E}{2} \quad .. \quad .. \quad .. \quad (5)$$

from which $|\rho_2|$ can be calculated as before. For impedance measurement (see a later section) a circle diagram is used and, of course, cable attenuation is allowed for on the cursor.

Practical System

A schematic diagram of the complete system is shown in Fig. 2. The generator is a wide-range tunable oscillator, tuning over the band 80–250 Mc/s being carried out repetitively by mechanical means. The X-deflection of the display oscilloscope is synchronized with the mechanical frequency sweep by a photo-electric cell. Thus the X co-ordinate of the display represents frequency to some scale. The generator, being amplitude stabilized, is a constant voltage and low impedance source. It is coupled to the aerial feeder cable via a resistor of selected value such that the total source impedance is equal to the characteristic impedance of the cable. The instantaneous voltage at the junction of this resistor and the feeder is the vector sum of the

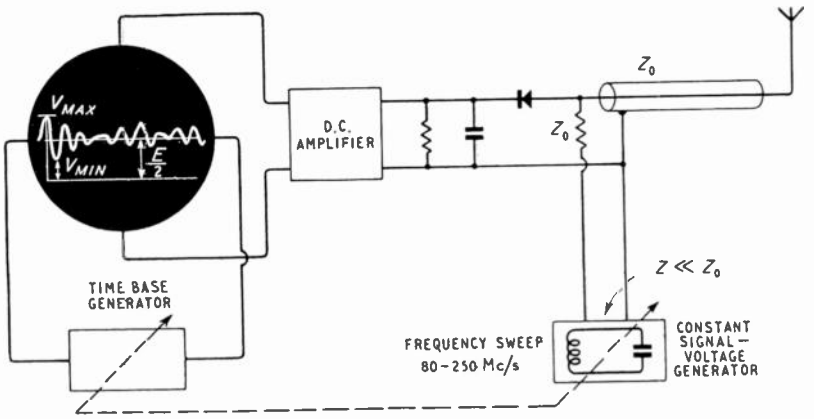

Fig. 2. *General arrangement of the equipment.*

outgoing and returning voltages. After detection, this resultant voltage is amplified and applied to the Y-deflector plates of the display tube.

For a matching display it is not essential to put $x = 0$. For instance, the voltage measured could be the one at the aerial end of the feeder. In general this will be less convenient, and is not desirable because it means connecting to the aerial terminals something that is not normally there. The presence of the feeder cable between detector and aerial has another advantage. It enables one to calculate the impedance of the aerial at those frequencies which give a maximum or minimum of V. At these frequencies the impedance at the input to the cable is resistive, and has a value given by the s.w.r. and Z_0 of the cable. The knowledge of the electrical length of the feeder and use of a circle diagram yield the aerial impedance. Some impedance measurements are given in a later section.

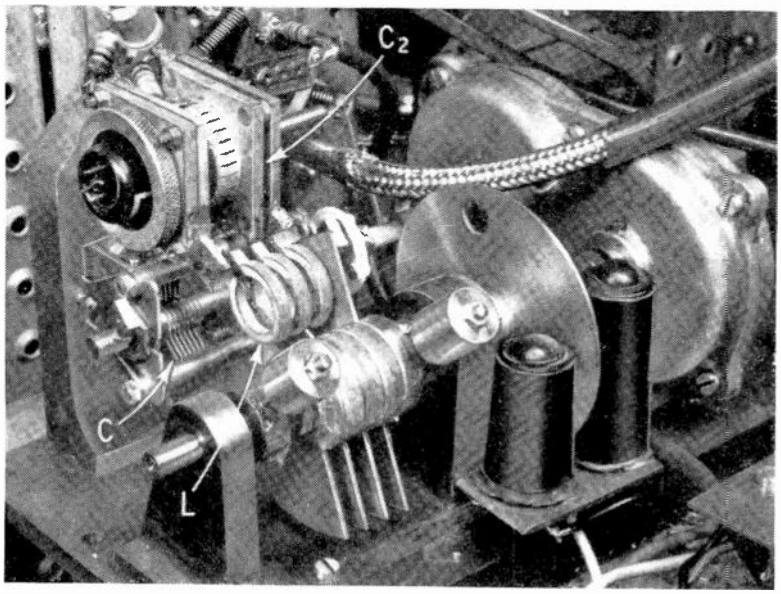

Fig. 3. *Detail of the oscillator unit.*

The Generator

The core of the system is the wide-range amplitude-stabilized oscillator. A Colpitts oscillator is used, and an obvious choice of tuning unit would appear to be a 'butterfly' circuit. However, this method was tried and abandoned for the following reasons:—

(1) The large physical length of the unit required for resonance at the lowest frequencies made the oscillator very susceptible to oscillations in unwanted modes.
(2) The difficulty of coupling to the feeder.
(3) Mechanical trouble due to the relatively high speed required (1,500 rev/min).

Details of the mechanically-swept oscillator are shown in Fig. 3, and the circuit diagram of the complete generator is in Fig. 4 where V_1 is the oscillator valve. In order to get the wide frequency range, variable capacitance and variable inductance tuning are used simultaneously. The variable capacitor C in Fig. 4 is a modified standard two-gang capacitor, and to get a small minimum capacitance the two sections are connected in series at the rotor, which is otherwise left floating. In this type of capacitor the rotor turns in ball bearings mounted on the capacitor frame. Both the rotor and the capacitor frame are electrically floating in this circuit, and both have stray capacitances to ground and other components. It was found that variable electrical contact in the bearings when the rotors were turning gave rise to severe electrical noise. This was cured by substituting Tufnol bearings for the metal ones. Another advantage of the Tufnol bearings is that the stray capacitance in the radio-frequency circuit is reduced because an impedance has been placed between rotor and frame. The variable inductor L in Fig. 4 consists of a helical coil, the turns being in parallel planes, and a set of vanes similar to the rotor vanes of a capacitor move between the turns. The vanes are of different sizes and can be shaped to alter the law. Both inductance and capacitance shafts are dynamically balanced and coupled through 1:1 gears to a 1,500 r.p.m. synchronous induction motor. Only half the period of revolution is used (i.e., the frequency changes from maximum to minimum in 20 milliseconds) and only during this period is the trace drawn on the c.r.o. No attempt has been made to make the frequency time law linear as it was found that to a first order it is exponential, and to display it on the screen an exponential time base is used. Linearity of the trace is by no means essential as the trace is self-calibrated in frequency, successive peaks being 10 Mc/s apart. Also on the shaft is a rotating disc, which together with a photo-electric cell and light source provides a triggering pulse to start the time base and brightening circuits. Amplitude stabilization is accomplished by rectifying the oscillator output with the rectifier D_1 and using this voltage to control the h.t. supply to the oscillator valve via a d.c. amplifier (V_2 to V_6). The gain of the d.c. amplifier from oscillator output to

oscillator anode is about 80 db, and the frequency response is 6 db down at 8 kc/s.

The time constant in the control circuit has to be short enough to cope with—in particular—the time variation of loading that occurs when the voltage at $x = 0$ changes from a maximum to a minimum. The control valve is placed in parallel with the oscillator valve.

The output impedance of the oscillator is less than 1 ohm over the whole frequency range, and the amplitude is 1·0 V r.m.s., constant within 1%. The low impedance output is connected to the feeder via a selected resistor R (Fig. 4), so that R + output impedance of oscillator $= Z_0$. This satisfies the condition $\rho_1 \equiv 0$. The r.f. voltage V at the junction of R and the feeder, which is the point $x = 0$, is detected, amplified and applied to the vertical deflection plates of a c.r.o. (Fig. 2).

It was found that particular care was required in the design of the circuits associated with D_1 and D_2 (Fig. 4). Stray inductance of the wiring R to D_1 will mean that the control voltage at the cathode of D_1 is different from the voltage at the generator end of R; i.e., although the control voltage is constant, the generated voltage is not. Also, stray capacitance from the anode of D_2 to earth has to be kept at a minimum to prevent shunting the feeder. The lead inductance from R into the feeder has also to be kept at a minimum.

Display Apparatus

The display unit consists of a flat-faced 3½-in. cathode-ray tube, stabilized r.f. power unit, time base and brightening circuits. This is shown in Fig. 5. The triggering pulse is amplified and triggers a one shot anode-coupled multivibrator. This provides the brightening pulse, which, after it has been differentiated, starts the time base.

D.c. amplification of the detected voltage is preferred to a.c. amplification because (a) it enables a quick check to be made of the constancy of the generated voltage over the frequency band, (b) it allows static s.w.r. measurements to be made, and (c) it permits accurate determination of the frequency at which a V_{min} occurs—information which yields the electrical length of the line. The response of the d.c. amplifier (Fig. 5) is 6 db down at 80 kc/s and the gain is about 44 db. This bandwidth is greater than would appear to be necessary because although the total duration of trace is 20 milliseconds it is exponential and therefore the duration of each cycle varies. The d.c. amplifier is shown in Fig. 5 and is of conventional design.

Applications

As explained previously, the X-axis represents frequency and the Y-axis is the modulus of the vector sum of the outgoing and returning voltage waves at the generator end of the cable. The display is, to a certain extent, self-calibrated in frequency—there are 17 oscillations, the frequency difference between adjacent turning values being 5 Mc/s. The voltages corresponding to standing-wave ratios of 1, 2, 3 and 4 to one have been calculated and marked on the face of the c.r.o. To this scale the envelope of the peaks therefore represents standing-wave ratio against frequency.

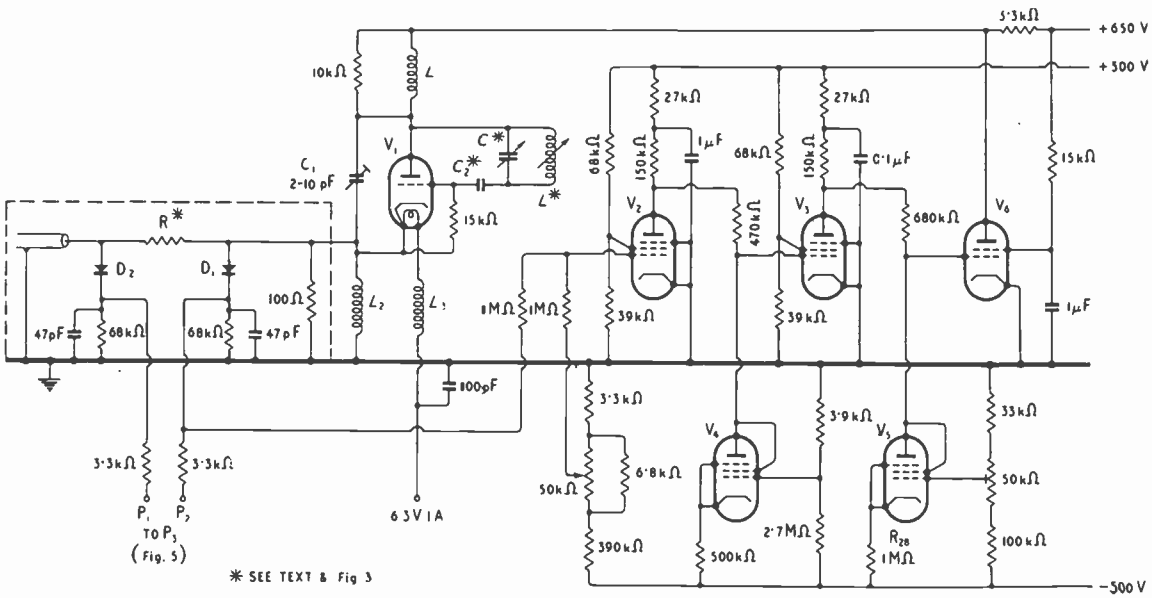

Fig. 4. *Circuit diagram of the oscillator unit.* L_1 *has* 28 *turns of No.* 25 *s.w.g. wire and* L_2, L_3 *have* 16 *turns of No.* 20, *all on* ¼*-in. Distrene rods;* $V_1 = CV397$; V_2, V_3, V_4, $V_5 = CV138$; $V_6 = CV345$; D_1, $D_2 = GEX66$.

The width of the envelope represents the modulus of the reflection coefficient $|\rho_2|$ and the ordinate can be calibrated in terms of $|\rho_2|$ if desired.

Fig. 6 shows some photographic records of c.r.o. traces for various terminations. All terminations were connected through an r.f. plug and socket.

(a) A shorting wire across the plug. This display approaches the case of a theoretically infinite s.w.r., deviations from a perfect rectangular envelope being caused by the imperfection of the short circuit, by the stray impedances mentioned previously and by attenuation.

(b) A resistor of 140 ohms. This shows a constant s.w.r. of 2:1.

(c) A thin half-wave dipole resonant at 155 Mc/s. The dipole is a balanced load connected to an unbalanced feeder.

(d) Air Ministry wideband aerial[6] with unbalance–balance transformer.

(e) A Discone aerial mounted 10 ft above ground. This aerial is of the type but not of the dimensions of those quoted in ref. 7.

(f) A long length of Uni-radio 32 with open end. The fine structure is caused by reflections from the open end of the long cable and the coarse structure is due to reflections from

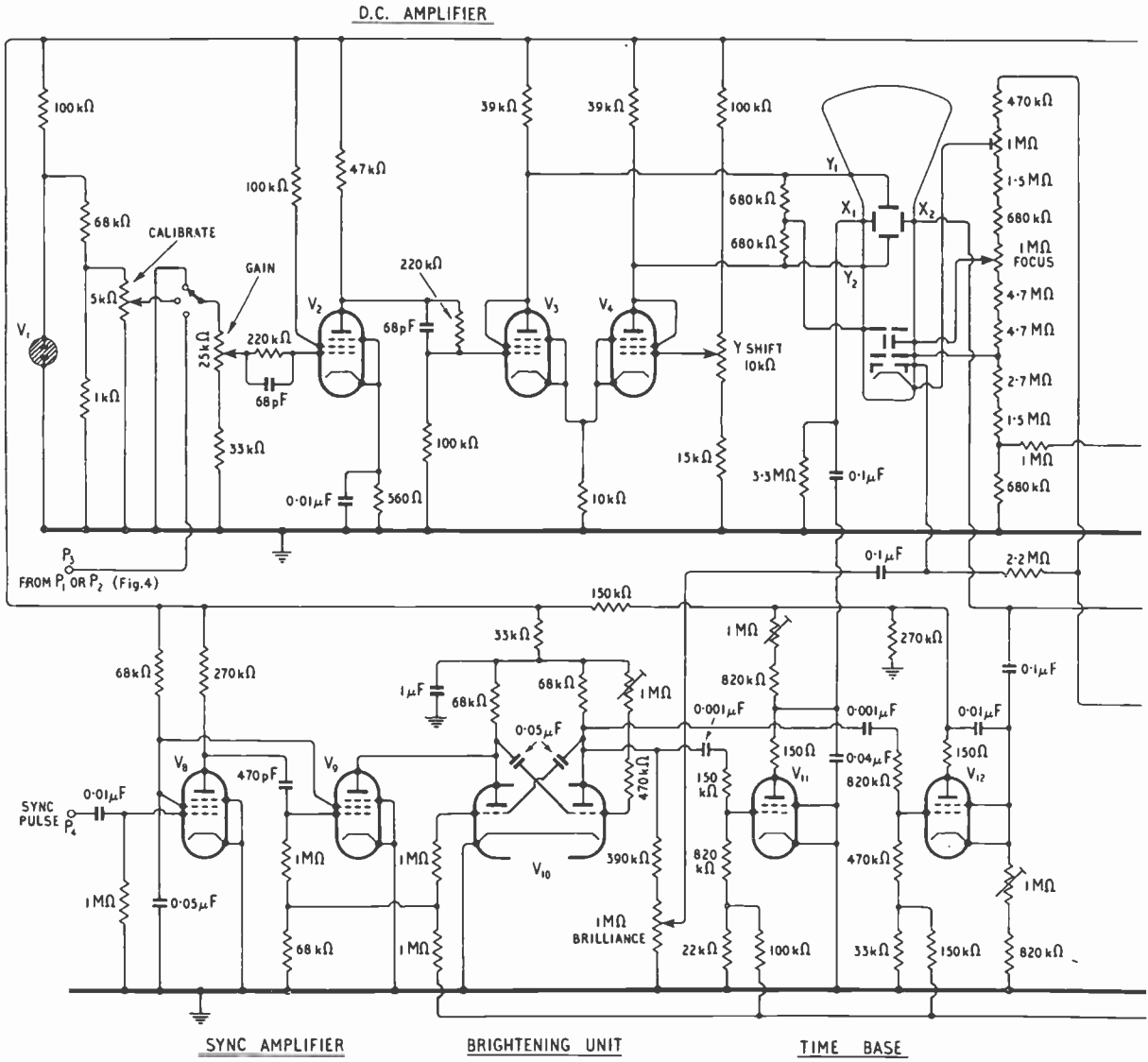

Fig. 5. *Circuit diagram of the display apparatus and power supply;* $V_1 = CV449$; V_2, V_3, V_4, V_5, V_6, V_8, $V_9 = CV138$; $V_7 = CV345$; $V_{10} = CV858$; V_{11}, $V_{12} = CV797$; $V_{13} = CV261$; $V_{14} = CV511$.

the junction of the two cables. The positions of discontinuities can readily be deduced from the periodicities of the waveform and equation (7). The amplitude of the more rapid oscillations (fine structure) decreases towards the right-hand side of the picture indicating that there is severe attenuation in this length of Uni-radio 32 at high frequencies.

Measurement of Impedance

When a voltage maximum or minimum corresponding to an s.w.r. of σ (>1) occurs at the point $x = 0$, then the impedance at this point is resistive and is given by σZ_0 or by Z_0/σ respectively. The impedance at the end of the line ($x = l$) can be deduced if the electrical length and the attenuation of the line are known. The equipment described in this paper provides facilities for the measurement of these three quantities. The standing-wave ratio and the attenuation are measured on the c.r.o. as described in previous sections, but if high accuracy is desired, the characteristics of the amplifiers can be eliminated by the use of a substitution method of voltage measurement. The electrical length of the line depends fundamentally on a measurement of frequency, a quantity which can be measured accurately by a crystal.

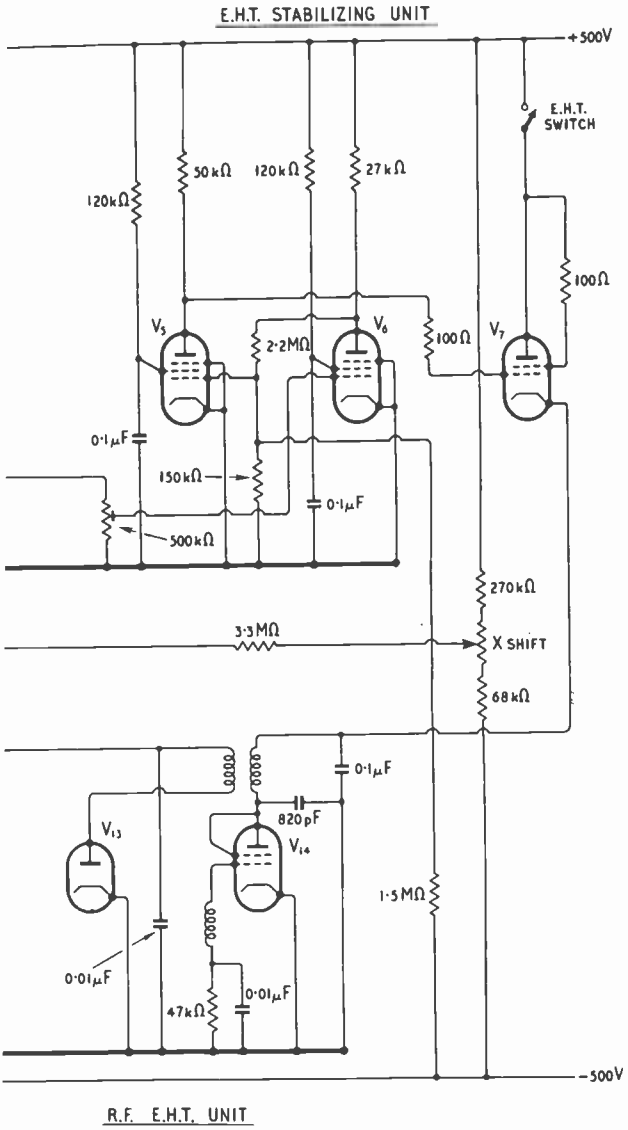

The method effectively provides information about the maxima, minima and s.w.r. on a line without slotting the line. This is an advantage over the conventional sliding-probe method, but there are the disadvantages that the line is long and it is not easy to measure over a narrow continuous range of frequencies (the line length would have to be changed). The present intention is to measure some impedances with the present equipment and to compare the results with those obtained using a commercially-available v.h.f. impedance bridge, the object being to demonstrate the reliability of the equipment. The s.w.r. at $x = 0$ and the cable attenuation have been measured directly from the oscilloscope display and an 8-in diameter circle diagram has been used in computation. It is, however, necessary to measure frequency with greater accuracy than is possible from the face of the oscilloscope. First, the approximate frequency at which, say, a minimum occurs can be read off the display which is, as has been mentioned before, self-calibrating. Frequency sweeping is then stopped and by manual tuning of the oscillator the spot on the c.r.o. is set accurately on the position of the minimum nearest the approximate frequency. The oscillator frequency is now accurately measured by a crystal wavemeter. The electrical length of the cable is deduced as follows from frequency measurements. The cable is carefully shorted at the load end and a frequency f_1 at which a minimum occurs at $x = 0$ is measured by the above method. At this frequency there is an integral number of half-wavelengths in the line and the value of the integer is obtained from a measurement of the physical length of the line and a knowledge of the dielectric in the line. The dielectric is polyethylene giving a phase velocity in the line of $2c/3$. The frequency f_1 has been measured to be 99·165 Mc/s so that the half-wavelength in the line is 1·008 m. Since the physical length is 10 m, the number of half-wavelengths is $10/1{\cdot}008 = 10$ to the nearest integer. The phase velocity and the physical length need

be known only with sufficient accuracy to define the nearest integer, in this case 10. It is now known that the length of the line is 1,800° at 99·165 Mc/s.

The electrical length at any frequency f_2 is given by the expression $\frac{1800}{99{\cdot}165} f_2$.

Here f_2 is the frequency at which a minimum occurs at $x = 0$ when the load is connected.

The number of half-wavelengths in the line at f_2

$$= \frac{10}{99{\cdot}165} f_2$$
$$= K f_2$$

where $K = 0{\cdot}10084$

This will in general be a non-integral number. The fractional portion represents the distance in half-wavelengths between the load and the voltage minimum nearest to the load.

As an example, $f_2 = 108{\cdot}49$ Mc/s.

$\therefore$ number of half-wavelengths in the line

$$= 0{\cdot}10084 \times 108{\cdot}49$$
$$= 10{\cdot}94$$

$\therefore$ electrical length between the load and the minimum nearest to the load

$$= \frac{0{\cdot}94}{2} = 0{\cdot}47 \text{ wavelength.}$$

From the display the v.s.w.r. = 2:1 and the attenuation is 0·4 db. Using a circle diagram and taking the Z_0 of the cable to be 70 ohms it is found that the load is $(36 + 10j)$ ohms.

The following table presents for comparison some impedances measured by the above method

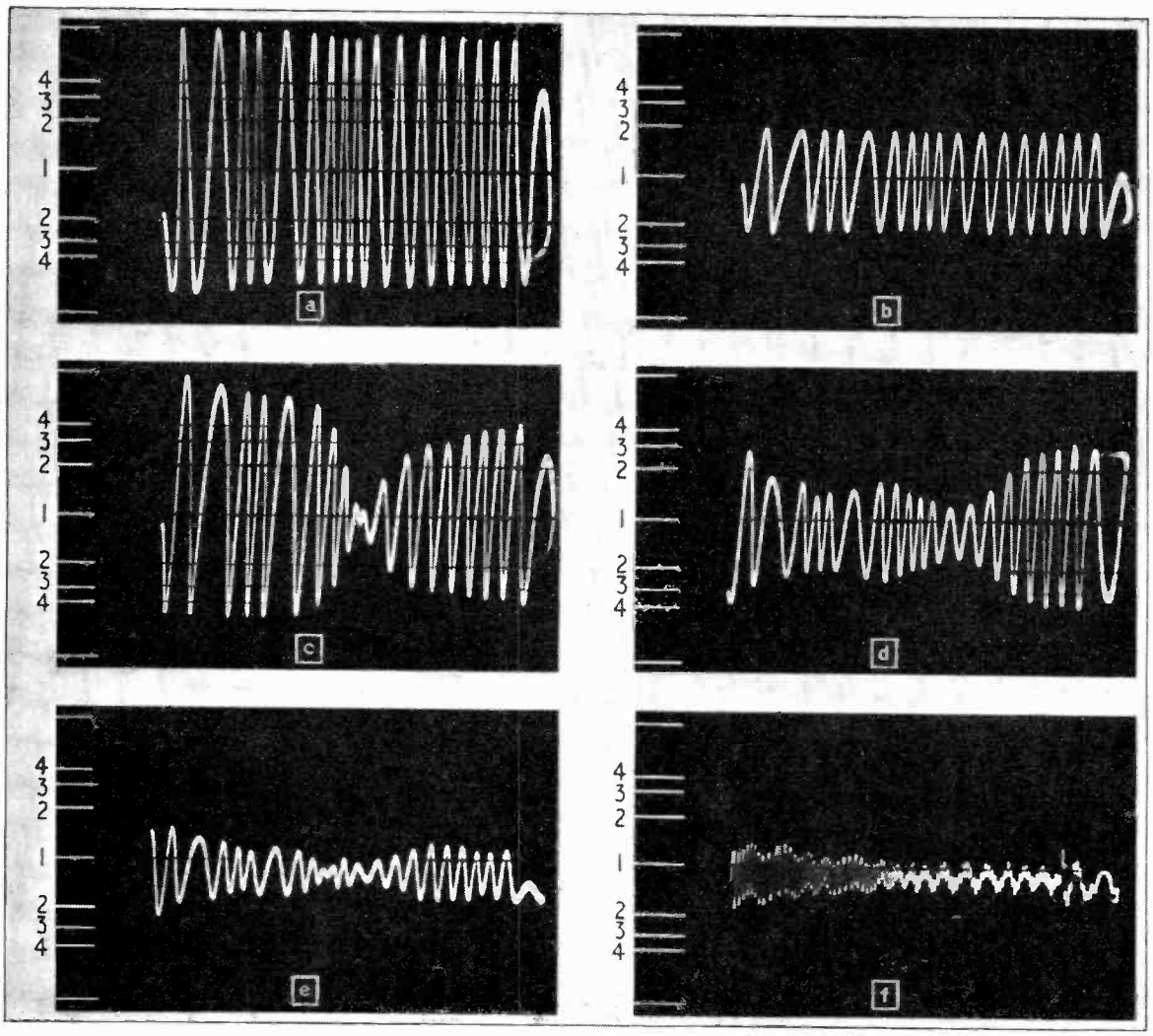

Fig. 6. *Some examples of display with the apparatus. The conditions are explained in the text; the vertical scales are of voltage standing-wave ratios and the horizontal sweep represents frequency.*

and by a commercially-available v.h.f. bridge (by Wayne-Kerr Ltd.).

It is repeated that the intention here is not to indicate the achievable accuracy of the method but to demonstrate by the agreement of results that the present equipment is operating on a sound basis.

Standing-Wave Ratio (to unity)	Frequency (Mc/s)	Impedance by above method (ohms)	Impedance by v.h.f. bridge (ohms)
2	108·49	$36 + 10j$	$36 + 11j$
2	131·91	$67 - 57j$	$69 - 55j$
4	155·43	$42 + 99j$	$42 + 102j$
4	193·72	$261 + 29j$	$250 + 35j$
4	216·43	$18 + 43j$	$23 + 35j$

It can be seen from the above table that the accuracy of impedance measurement is good but it falls off as the s.w.r. and the frequency increase.

Acknowledgment

This paper is published by permission of the Chief Scientist, Ministry of Supply.

REFERENCES

[1] S. A. Schelkunoff, "Advanced Antenna Theory", Wiley & Sons, 1952.

[2] C. H. Papas and R. King, "Input Impedance of Wide-Angle Conical Antennas Fed by a Coaxial Line", *Proc. Inst. Radio Engrs*, November 1949.

[3] L. L. Libby, "Frequency Scanning V.H.F. Impedance Meter", *Electronics*, June 1948.

[4] Handbook of Scientific Instruments and Apparatus, 1951, p. 220 (35th Physical Society's Exhibition).

[5] F. M. Colebrook, "Transmission Line Theory", *Wireless Engineer*, April 1944.

[6] A. H. Brown and H. M. Stanier, "Recent Developments on V.H.F. Ground Communication Aerials for Short Distances", *J. Instn elect. Engrs*, Vol. 94, Part IIIA, p. 636.

[7] A. G. Kandoian, "Three New Antenna Types and their Application", *Proc. Inst. Radio Engrs*, February 1946.

SERIES RESONANT CIRCUIT THEORY

By A. J. Lyon, M.A.

SUMMARY.—The resonance properties of a simple series L, R, C circuit may be affected (a) in the case of frequency tuning, by the dependence of R on frequency and (b) in the case of capacitance tuning, by the presence of capacitor losses or of coil self-capacitance. In view of the importance of such circuits in theory and in practical measurements the fractional errors introduced by such effects (at current resonance) have been calculated and are found to be: (1) in tuning capacitance, α/Q^2, (2) in resonant frequency, $\alpha/2Q^2$, (3) in maximum current, $\alpha^2/2Q^2$, (4) in bandwidth or selectivity, α^2/Q^2. The factor α is likely to be of order unity for frequency tuning but more usually of order 1/10 for capacitance tuning. These results indicate the conditions under which the effects in question are negligible. Similar results apply to other cases of resonance.

Introduction

When we endeavour to construct the simple lumped-constant series-resonant circuit shown in Fig. 1(a), we find that, when we take account of the self-capacitance C_0 of the coil, the leakage conductance G representing capacitor losses and the resistance of meter and leads R_x, the actual circuit becomes, for example, as shown in Fig. 1(b). According to elementary circuit theory[1] the two circuits are approximately equivalent if

$$R = R_0 + R_x C_t^2/C^2 + G/\omega^2 C^2 = R_0 + \delta R, \text{ say} \quad (1)$$

and

$$C = C_t + C_0 \quad (2)$$

provided that $R_x \ll 1/\omega\sqrt{C_0 C_t}$. The total current is then given by

$$I^2 = \frac{E^2}{R^2 + (\omega L - 1/\omega C)^2} \quad (3)$$

R, however, is not a constant but is a function both of frequency (since all losses may be expected to increase with frequency) and also, by equation (1), of the tuning capacitance C_t. Hence the condition of maximum current will differ from that of zero reactance by a small amount whether the circuit is tuned to resonance by varying ω or by varying C_t. Moreover the measured current I_m, in the circuit arrangement of Fig. 1(b), is not equal to the total current I but is less than this by the amount of current flowing in

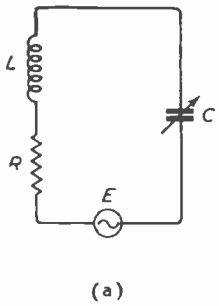

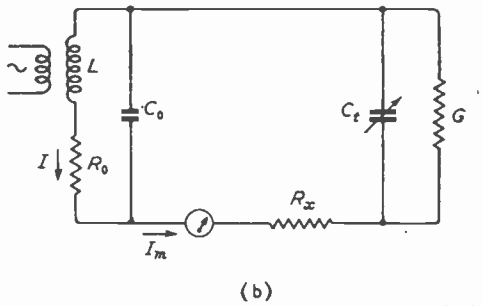

Fig. 1. (a) *A simple series-resonant circuit*; (b) *the practical form of* (a), *including self-capacitance and stray circuit losses.*

MS accepted by the Editor, May 1954

the self-capacitance C_0. If $R_x \ll 1/\omega C$ we may write, approximately,

$$I_m = IC_t/C \quad \ldots \quad \ldots \quad \ldots \quad (4)$$

and it is clear that, at any rate for capacitance tuning, the condition for maximum I is not identical with that for maximum I_m.

Such deviations from 'true' resonance will of course affect the bandwidth and selectivity of the circuit, and will introduce errors into any measurements based on the formulae of simple resonance theory. Although we may expect that, at least in a high-Q circuit, these errors will be small, nevertheless, in view of the basic character of the circuit both in theory and practice, it seems worth while to calculate their magnitude, and hence determine the precise conditions under which they are negligible. For simplicity, attention has been concentrated on series current resonance and one particular, though typical, circuit arrangement, but it is clear that similar considerations will apply to other types of resonance and other practical variations of the circuit.

Calculation of the Errors

The condition for maximum current, obtained by differentiating equation (3), or equation (4), with respect to C_t or ω—whichever is the tuning variable— has in all cases the approximate form

$$\omega^2 LC = 1 - \alpha/Q^2 \quad \ldots \quad \ldots \quad \ldots \quad (5)$$

where $Q = \omega L/R$, the *circuit* Q-factor.

When ω is the variable, and we assume that the total current I is measured,

$$\alpha = \tfrac{1}{2}\frac{\omega}{R}\frac{dR}{d\omega} = \alpha_1, \text{ say.} \quad \ldots \quad \ldots \quad (6)$$

If R is proportional to ω^n, $\alpha_1 = n/2$ and therefore will usually lie between say $\frac{1}{4}$ and 1.

When C is the variable

$$\alpha = \frac{C}{R}\frac{dR}{dC} = \alpha_2, \text{ say.} \quad \ldots \quad \ldots \quad (7)$$

dR/dC can be estimated from equation (1). If the second term is negligible and $G = \tau\omega C$, where τ is the power factor,

$$\alpha_2 = -\,\delta R/R \quad \ldots \quad \ldots \quad \ldots \quad (8)$$

and this is appreciable only where capacitor losses are comparable with coil losses. If G is negligible

$$\alpha_2 = 2\frac{C_0}{C_t}\frac{\delta R}{R} \quad \ldots \quad \ldots \quad \ldots \quad (9)$$

and this is small unless the self-capacitance C_0 is comparable with the tuning capacitance C_t.

To estimate the effect of measuring I_m instead of the total current I we may differentiate equation (4) assuming now that R is constant. We then find

$$\alpha = -\,C_0/C_t = \alpha_3 \ldots \quad \ldots \quad \ldots \quad (10)$$

and again this is large only if C_0 and C_t are of similar magnitude.

Roughly speaking, α may be expected to be of order unity for frequency tuning, but will often be of order 1/10 or less for capacitance tuning.

Resonant Current, Bandwidth and Selectivity

According to elementary resonance theory[1], the maximum, or resonant, current is

$$I_r = E/R, \quad \ldots \quad \ldots \quad \ldots \quad \ldots \quad (11)$$

the bandwidth (i.e., the difference between the frequencies for which $I = I_r/k$) is given by

$$(\omega_1 - \omega_2)/\omega_r = \sqrt{k^2 - 1}/Q, \quad \ldots \quad (12)$$

ω_r being the resonant frequency, and similarly when C_t is the tuning variable

$$\frac{C_1 - C_2}{C_1 + C_2} = \frac{\sqrt{(k^2 - 1)}}{Q} \quad \ldots \quad \ldots \quad (13)$$

Any deviation from true resonance which can be expressed in the form of equation (5) will cause errors in these equations whose magnitude is readily calculated. Equation (11) now becomes

$$I_r = \frac{E}{R}\left\{1 + \frac{\alpha^2}{Q^2}\right\}^{-\frac{1}{2}} \approx \frac{E}{R}\left(1 - \tfrac{1}{2}\frac{\alpha^2}{Q^2}\right). \quad (14)$$

ω_1 and ω_2 now satisfy the equation

$$\frac{\omega_r^2}{\mu\omega^2} = 1 \pm \frac{\omega_r}{\omega}\frac{\sqrt{(\nu k^2 - 1)}}{Q}, \quad \ldots \quad (15)$$

where $\mu = 1 - \alpha/Q^2$ and $\nu = 1 + \alpha^2/Q^2$, so that

$$\frac{(\omega_1 - \omega_2)}{\omega_r} = \frac{\sqrt{(\nu k^2 - 1)}}{Q} \quad \ldots \quad (16)$$

$$\approx (1 + \alpha^2/Q^2)/Q \quad \ldots \quad \ldots \quad (16a)$$

when $k^2 = 2$.

Similarly C_1 and C_2 now satisfy

$$C_r/\mu C = 1 \pm \sqrt{(\nu k^2 - 1)}/Q \quad \ldots \quad \ldots \quad (17)$$

and so

$$\frac{C_1 - C_2}{C_1 + C_2} = \frac{\sqrt{(\nu k^2 - 1)}}{Q} \quad \ldots \quad \ldots \quad (18)$$

$$\approx (1 + \alpha^2/Q^2)/Q \quad \ldots \quad (18a)$$

when $k^2 = 2$.

It will be noted that for $\alpha = 1$ equations (12) and (13), which are sometimes used for measurements, remain accurate to within 1% provided $Q > 10$, but if $\alpha = 1/10$, as may be the case with capacitance tuning, the error does not exceed 1% unless $Q < 1$.

Acknowledgment

The writer wishes to thank particularly Sir Edward Appleton, F.R.S., Principal of Edinburgh University, for his interest and advice in the preparation of this note.

REFERENCE

[1]Hartshorn, L. "Radio-Frequency Measurements by Bridge and Resonance Methods", Chapman and Hall, 1940.

LOW-FREQUENCY DIRECTION FINDER

Twin-Channel Cathode-Ray Design

By C. Clarke, A.M.I.E.E. and V. A. W. Harrison

(Official Communication from D.S.I.R. Radio Research Station, Slough)

SUMMARY.—The instrument described is a simplified and improved version of a type of direction finder in current operational use for locating thunderstorms. Signals from crossed-loop aerials, one metre square, are amplified in matched amplifiers, tuned to 10 kc/s, and applied to the cathode-ray tube. In observations on atmospherics the tube is brilliance-modulated by a pulse derived from the atmospheric. When a network of stations, linked by telephones, is used, the atmospheric received at a selected station also causes an audible pulse to be passed over the telephone lines; this facility improves the co-ordination of the observations.

If required, a sense amplifier may be incorporated to remove the 180° ambiguity which normally occurs in the bearings; the aerial for this unit is a short vertical rod.

1. Introduction

FOR the location of thunderstorms the British Meteorological Office uses a network of four stations equipped with twin-channel cathode-ray direction finders operating at frequencies near 10 kc/s. The design of the instruments and the observation technique have been described in published papers[1,2,3].

The instruments were designed partly to facilitate investigation of various types of error, and they were therefore made to provide the highest possible accuracy and to tune continuously over a frequency range 10–30 kc/s. The heterodyne principle was used to convert the signal frequencies to a fixed output frequency of 50 kc/s to investigate techniques of brilliance modulation. In practice, these instruments were almost invariably used at a frequency of about 10 kc/s; the possible advantages of a high output frequency were not realized and the high inherent accuracy of the equipment could not be fully used, owing to external factors such as imperfections of the site.

In designing new instruments it was therefore decided to use signal-frequency amplification only, to restrict the frequency range and if necessary to accept a rather lower standard of accuracy. It was considered that with these changes and with other improvements in design an equipment could be built which would be simpler to operate, cheaper to manufacture, suitable for use at tropical stations and sufficiently small and light for use in the vehicle. An experimental equipment has been built in which these objects have been achieved, and a number of similar models have been made commercially.

2. General Features

A brief description of the new instrument has already been published[4]. In the electrical design it differs from the previous model in the following respects:

(a) The amplifiers are of tuned-radio-frequency design and can be tuned only over small pre-selected bands. These changes resulted in a substantial simplification in construction and operation.

(b) Push-pull operation is restricted to the output stages of the amplifiers, enabling the number of valves to be reduced.

(c) The test signal used in the alignment of the amplifiers is injected across a small resistor in series with the aerials instead of across the aerials themselves.

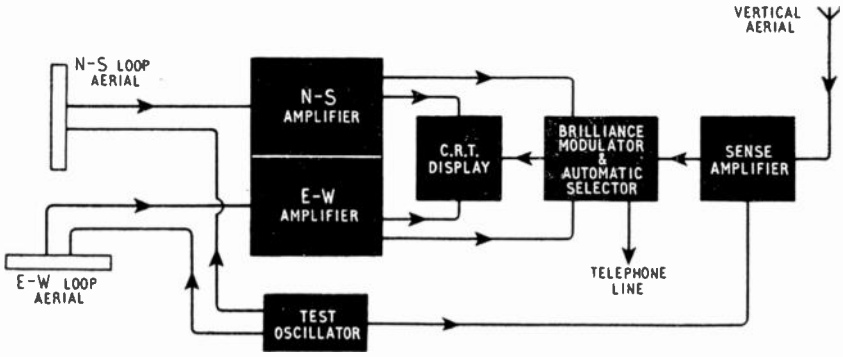

Fig. 1. *Block diagram of the direction finder.*

MS accepted by the Editor, June 1954

(d) An automatic selector is incorporated for use in the co-ordination of the observations at the two or more stations of a network. The reception of an atmospheric having an amplitude above a preset threshold level at the control station causes a short audible pulse to be passed over the intercommunications system to the other stations.

(e) The design includes a sense amplifier, as an optional feature.

In other respects there is no basic change in the electrical design. The simplifications which have been introduced have enabled the size and weight of the equipment to be considerably reduced, and all units other than the aerials are contained in a single console. A block diagram is shown in Fig. 1 and a photograph of the console in Fig. 2. The upper chassis contains the twin amplifiers, the centre chassis the test oscillator, display unit, brilliance modulator and automatic selector, and the lower chassis contains the power units. The upper and lower units can be withdrawn on telescopic runners for inspection, and access to all units can be gained from the rear of the console.

The telephone lines for communication with the other stations of a network terminate in two jacks, into which headsets may be plugged.

A heater and fan are fitted for use under adverse climatic conditions; for prolonged use in tropical climates it would probably be necessary to install the equipment in an air-conditioned building.

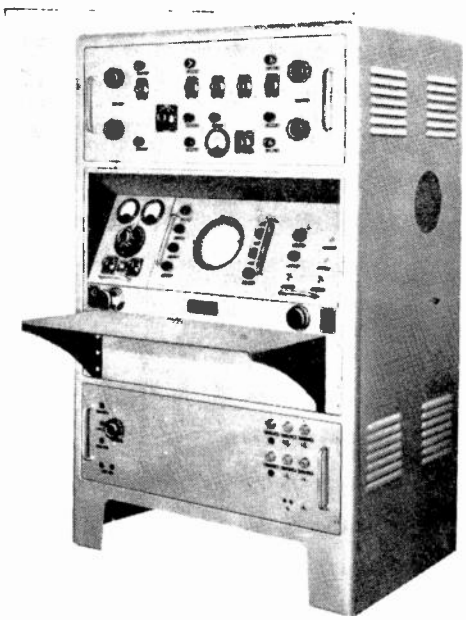

Courtesy Cinema-Television Ltd.

Fig. 2. *Photograph of the direction finder; the height is 54 in., the width 36 in. and the depth 24 in.*

The equipment is designed for operation from a 230-V, 50-c/s supply and the power unit contains a variable-ratio transformer to permit operation from voltages in the range 200–250V.

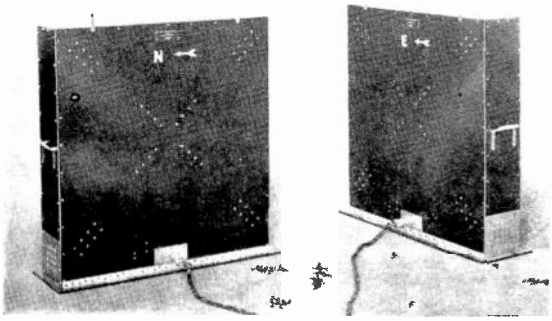

Courtesy Cinema-Television Ltd.

Fig. 3. *The loop aerials are 36 in. square and are mounted in T-formation.*

3. Detailed Description

3.1. *Aerial System*

The loop aerials, shown in Fig. 3, are about one metre square and are arranged in T-formation in north–south and east–west directions. Each loop consists of 300 turns, in two layers, with a total inductance of 100 mH; it is centre-tapped to earth and on either side of the earth-connection a 10-ohm wire-wound resistor is connected in series with the loop. The test signal is injected across one resistor and the other is included to preserve the electrical balance of the system, which helps to minimize antenna effect and unwanted pick-up on the feeders. The inductances of the two halves of each loop differ by less than 0·5 % and the two loops are matched to this accuracy.

The windings are completely enclosed by insulating material, for mechanical protection. This covering also gives some protection against the weather, although the aerials are not intended to withstand prolonged exposure.

Braided concentric cables are used to connect the aerials to the amplifiers and test oscillator; the normal length of the cables is 12 metres but this may be extended to 30 metres if required.

To minimize mutual inductance between the aerials they are operated at least two metres apart between centres and carefully adjusted in position. For mobile work they are bolted to a framework which ensures that they are always in their correct relative positions.

3.2. *Amplifiers*

Each amplifier consists of a tuned cathode-follower input stage, two resistance-capacitance coupled amplifying stages, a phase-splitter and a push-pull output stage. The circuit is shown in

simplified form in Fig. 4. The instruments are designed for the reception of narrow bands of frequencies centred on 10 kc/s and 16 kc/s and the main function of the variable capacitors is to match the two amplifiers in respect of the phase shift of the amplified signal. The required band is selected by switches at the rear of the chassis which introduce fixed capacitors across the aerial and output tuned circuits. Spare switch positions are provided to enable other bands of frequencies in the range 8 to 16 kc/s to be used, if required, by the insertion of capacitors. The equipment may be modified for use at frequencies up to about 38 kc/s by using half the turns of the loops and removing fixed capacitors in the test oscillator to increase its tuning range.

The cathode-follower stage is linear for c.w. input signals up to 15 V r.m.s. The low-resistance attenuator in the cathode load introduces a total attenuation of 72 db in steps of 3 db. The output stage and transformer provide up to 1,200 V peak-to-peak at the plates of the cathode-ray tube without significant departure from linear operation; an output of 400 V is sufficient to provide a full-scale trace.

Considerable difficulty was experienced in the design of an output stage and transformer which would be linear in operation and which would not introduce undesired coupling to earlier stages or between the two amplifiers. To reduce the external field it was found necessary to use a heavily-screened dust-cored transformer with a low-Q secondary.

The bandwidth of the amplifiers must be sufficiently small to avoid interference from transmitters. However, it has been shown[5] that small bandwidths may lead to errors due to interference between successive atmospherics, so a compromise is necessary. A bandwidth of 300 c/s between half-power points has been used so far, but in situations where station interference is not serious, a wider bandwidth would be advisable.

Means are provided for equalizing phase-shifts, bandwidths and gains of the amplifiers so that their overall response curves are identical. Equal voltages from the test oscillator are applied across the small resistors in the loops and matching adjustments are made stage by stage so that the trace is a straight line at 45° to the axes of the c.r.t. plates. For this procedure a switch with four positions is provided at each stage to give (i) normal operation with the amplifiers operating independently; (ii) coupled operation with the grids of the corresponding stages connected; (iii) N–S trace only, and (iv) E–W trace only.

The phase characteristics and bandwidths of the tuned circuits are equalized by means of the tuning controls and by variable resistors connected across the tuned circuits. Further controls are used to equalize the phase-shifts in the RC stages. The gains of the two amplifiers are matched by differential variation of the bias voltages applied to the output and RC stages.

The amplifiers for the two channels are constructed symmetrically above and below a central horizontal panel in the chassis and the attenuators are ganged for operation by a single control. The front panel also carries a meter and an associated switch to enable voltages and currents at various points in the amplifiers to be measured.

Valves are mounted externally in a horizontal position on a vertical panel at the rear of the

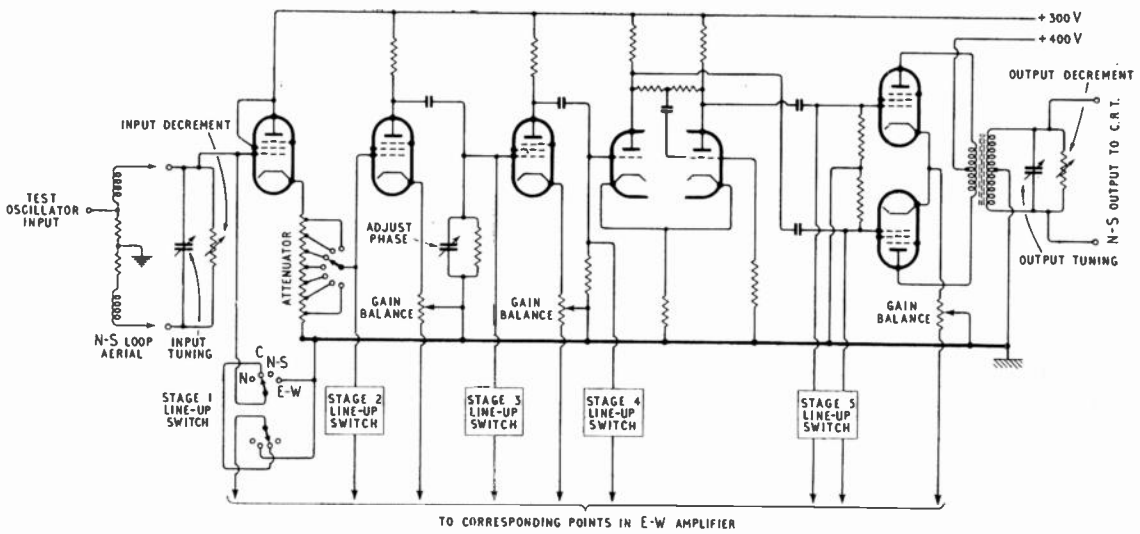

Fig. 4. *Simplified circuit diagram of one of the amplifiers.*

chassis; drift of the tuned circuits due to thermal changes is thus minimized.

3.3. *Display Unit*

Bearings are displayed on a 7-in. compass-type cathode-ray tube and are measured by means of a cursor assembly. Ideally each trace appears as a diametral line along which an engraved line on the Perspex cursor is set. The bearing is then read on a Perspex scale in which the cursor rotates in three bearings. The engravings are plate-lit by four lamps mounted in holes on the stator, and the brightness may be varied.

The cathode-ray tube has a green long-persistance screen and is of a type with the deflection plates orthogonal to within $\frac{1}{4}°$. The circuit of the display unit is mainly conventional, but neutralizing capacitors are provided to eliminate errors due to unbalanced capacitive coupling between the plates.

The display unit is designed with the minimum of projections on the front panel to simplify the mounting of a camera without removing the cursor assembly. The type of camera normally used holds 60 metres of 35-mm film which can be motor driven at speeds up to 40m/min; a speed of 20 cm/min is suitable for the routine location of thunderstorms. These facilities have been used extensively for research purposes, for which it is often necessary to obtain a permanent record of large numbers of atmospherics, including those with small amplitudes.

Records have been obtained over a period of 24 hours with the instrument unattended. During such operations timing signals may be recorded along the edge of the film by means of either a neon lamp mounted in the camera or a small auxiliary cathode-ray tube, and signals from the test oscillator are applied automatically, at intervals, to check the alignment of the circuits.

3.4. *Brilliance Modulator and Automatic Selector*

In normal operation, bearings are taken only on atmospherics with large amplitudes, and the much greater number of smaller atmospherics, if displayed on the tube would distract the observer. The tube is, therefore, biased to cut-off and a brilliance modulator is triggered by atmospherics having amplitudes greater than a predetermined level. This system enables a high final brilliance to be used, which increases the persistence of the trace and makes the bearings easier to read. If the automatic selector is used atmospherics which trigger the brilliance modulator also operate the selector.

The circuits of these units are shown in Fig. 5. Since the brilliance modulator must operate with atmospherics from all directions the trigger signal is derived from the voltages from both amplifiers, combined in phase-quadrature. Unidirectional pulses, 20 msec long and of controllable amplitude, are derived from the first multivibrator and are used to modulate the brilliance of the cathode-ray tube.

When the selector is in use at any one station the length of the pulse from the first multivibrator is automatically increased to 100 msec and by means of relay A a short audible pulse of predetermined amplitude is passed over the communications system to the other stations of the network. The second multivibrator then operates and by means of relay B, introduces a quiescent period, variable in the range 3 to 10 seconds, during which no further audible pulses can be transmitted. The quiescent period is introduced to enable the bearings to be recorded or passed to the control station; the traces are still visible, however, and any of particular interest can be selected verbally.

The automatic selection facility was developed in the first instance for use in a research pro-

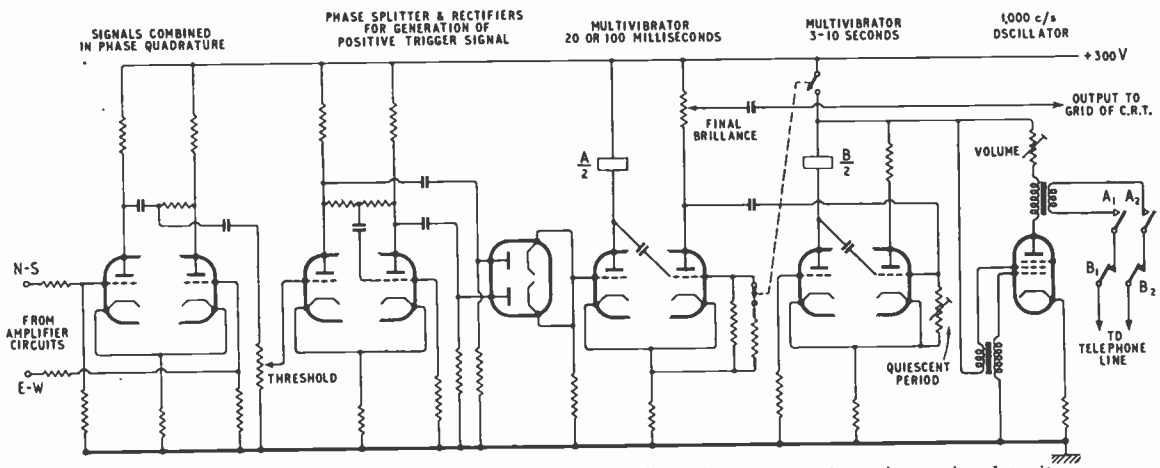

Fig. 5. *Brilliance modulator and automatic selector circuits: relay contacts shown in no-signal position.*

gramme involving the co-ordination of direction-finding observations with the recording of waveforms of atmospherics. It was subsequently found to be of value in co-ordinating the observations of bearings on a routine basis[6] and was, therefore, made an integral part of the new design.

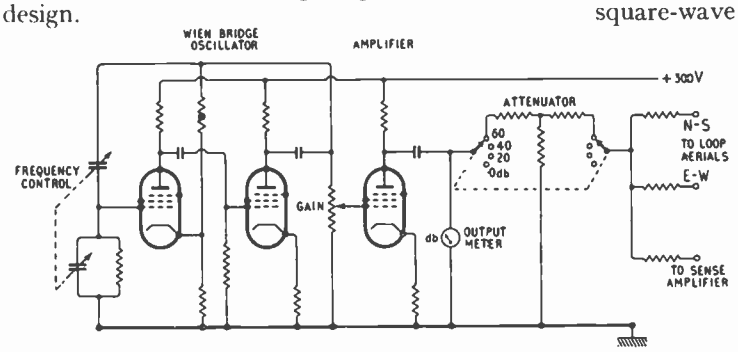

Fig. 6 (*above*). *Test oscillator.*

Fig. 7 (*right.*) *Sense amplifier.*

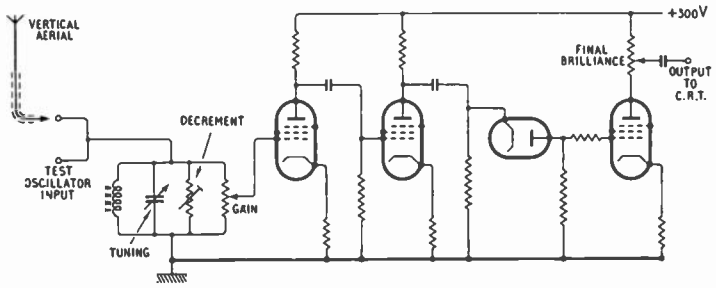

3.5. *Test Oscillator*

The test oscillator provides an unmodulated signal which is used in the alignment of the equipment, in performance checks and in the location of faults. The circuit is shown in Fig. 6.

A resistance-capacitance Wien bridge oscillator[7] with variable capacitance is used, to minimize the need for screening. It carries the only frequency scale on the equipment (7–20 kc/s). The output is sufficient to provide a full-scale trace with the amplifier attenuators set for minimum gain, and can be varied by means of stepped and continuously variable attenuators. Changes in output level introduced by the variable control are indicated on a meter.

3.6. *Sense Amplifier*

A sense amplifier is used to modulate the brilliance of the cathode-ray tube at signal frequency so that bearings are indicated without ambiguity by radial traces. It has been developed mainly for research applications and is not normally required in the operation of a network where the 180° uncertainty in the bearings is resolved in the plotting operation. It might be needed, however, in parts of the world subject to intense local thunderstorms, as a means of simplifying the display and improving the identification of particular atmospherics at several stations. It is therefore an optional feature and can be mounted on the brilliance modulator chassis.

The amplifier, the circuit of which is shown in Fig. 7, is used with a vertical aerial, six metres high, to which it is connected by a screened cable; it has a tuned input circuit, two resistance-capacitance-coupled amplifying stages and an output stage which, by a limiting process, produces square-wave signals for modulating the cathode-ray tube. The bandwidth is the same as that of the main amplifiers.

To produce a radial trace the phase of the output voltage from the sense amplifier must be correctly related to that of the deflection voltages. The adjustment is made by slight variation of the sense amplifier tuning.

4. Performance and Applications

With the amplifiers operated at maximum gain a c.w. field of 200 μV/m r.m.s. produces a full-scale (10 cm) trace. In practice this means that atmospherics can be recorded from sources at distances of several thousand kilometres; when baselines of the order of 500 km are used the useful range of operation is limited not by lack of sensitivity but by bearing errors.

The amplifiers are linear in operation for output voltages up to three times that giving a full-scale trace. Within these limits errors on vertically-polarized signals are less than 1°. A further error up to 1° may occur if the instrument is unattended for a period of several hours after a warm-up period of five minutes and subsequent alignment.

In normal use, the accuracy to which thunderstorms may be located is limited by site-errors, polarization errors and possibly by errors due to atmospherics occurring almost simultaneously. These limitations have been discussed fully elsewhere[5,8], and it has been shown that, in daytime, with a four-station network on 500-km baselines, accurate location is limited to about 1,500 km, although useful indications can be obtained at greater distances. At night, accuracy is lower due to an increase in polarization errors.

An instrument of the new design has been used for investigating the errors. For this purpose it was installed in a Meteorological Office van, with radio-communication equipment, petrol-electric generators and a plotting chart. The assembly served as a self-contained mobile station and has been used at some of the established sites and at other temporary sites. By operating the mobile station on sites adjacent to the fixed stations and comparing observations made on atmospherics, various causes of large systematic errors, such as hills and buried cables have been investigated[5,8]. The sensing facility is particularly valuable in this work, since it avoids the necessity for using a network of stations for removing the bearing ambiguities.

Photographic recording has been used experimentally in the location of thunderstorms but, for routine work the technical advantages do not generally justify the additional cost and the time required for processing and analysing the film. The facilities for recording over long periods with the instrument unattended have, however, been used extensively to record the diurnal variations in the bearing of the Rugby GBR transmissions on 16 kc/s by using the mobile station at various sites.

Acknowledgments

The instrument described above was developed for the Meteorological Office by the Radio Research Organization. The paper is published by permission of the Director of Radio Research of the Department of Scientific and Industrial Research and of the Director of the Meteorological Office.

The work was carried out under the supervision of F. Horner, D.S.I.R.

REFERENCES

[1] F. Adcock and C. Clarke, "The Location of Thunderstorms by Radio Direction Finding", *J. Instn elect. Engrs*, 1947, Part III, Vol. 94, pp. 118–125.

[2] C. V. Ockenden, "Sferics", *Met. Mag. Lond.*, 1947, Vol. 76, pp. 78–84.

[3] C. Clarke, "A Meteorological Direction Finder", *Wireless World*, 1949, Vol. 55, No. 10 (Overseas Edition), S.12.

[4] F. Horner, "A New Design of Radio Direction Finder for locating Thunderstorms", *Met. Mag. Lond.*, 1954, Vol. 83, pp. 187–188.

[5] F. Horner, "The Accuracy of the Location of Sources of Atmospherics by Radio Direction Finding," *Proc. Instn elect, Engrs.* 1954, Part III, Vol. 101, pp. 383–390.

[6] A. L. Maidens, "An Automatic Selecting Device for 'Sferics' Observations", *Met. Mag. Lond.*, 1951, Vol. 80, pp. 281–282.

[7] M. G. Scroggie, "Audio Signal Generator", *Wireless World*, 1949, Vol. 55, No. 8, pp. 294–297; No. 9, pp. 331–334.

[8] F. Horner, "Radio Direction Finding: Influence of Buried Conductors on Bearings", *Wireless Engineer*, 1953, Vol. 30, pp. 187–191.

CORRESPONDENCE

Letters to the Editor on technical subjects are always welcome. In publishing such communications the Editors do not necessarily endorse any technical or general statements which they may contain.

Nyquist's Criterion for Multiple-Loop Feedback Circuits

SIR,—In a recent paper[1] Nyquist's Criterion for single-loop feedback circuits was derived without the use of contour integration in the complex plane. It may interest your readers that an alternative way exists based on conformal transformation. The alternative method can be made to include multiple-loop feedback circuits. So far as I am aware, the method has not been published yet coherently, though it is very useful and illustrates clearly the basic principles underlying Nyquist's Criterion.

Let the usual single-loop feedback amplifier of amplifier portion gain A and feedback network gain β be opened at the grid of any valve within the loop. Let a damped or growing voltage signal equal to the real part of $e = E\epsilon^{pt}$ where $p/j = \mu/j + \omega$ is the complex angular frequency, be applied between cathode and grid of the opened valve (grid on higher potential). Then a voltage equal to $Te = -\beta Ae$ appears between the 'grid node', defined as the point of the network from which the grid was disconnected, and the cathode of the valve (cathode on higher potential). Further voltage equal to $Fe = (1 - \beta A)e$ appears between the 'grid node' and the grid (grid on higher potential). T and F are Bode's return ratio and return difference respectively[2]. They are the ratio of two polynomials in p. Without changing anything in the voltage and current conditions in the network a damped or growing voltage signal equal to the real part of $(1 + T)\,e = Fe$ could be applied between the 'grid node' and the grid of the opened valve, in lieu of the above signal between the grid and the cathode. Hence, self-excited currents and voltages in the normal connection of the network (i.e., with grid node and grid short-circuited) can occur at values of p for which $(1 + T) = F = 0$. If zeros of F occur for positive real parts of p, growing oscillations set in from a small disturbance, or the network is unstable. The reasoning described is always valid also for multiple-loop feedback circuits, and also when A and β cannot be defined precisely on their own. A convenient way of computing $T(p)$ or $F(p)$ for multiple-loop feedback circuits is by the use of the return difference matrix[3].

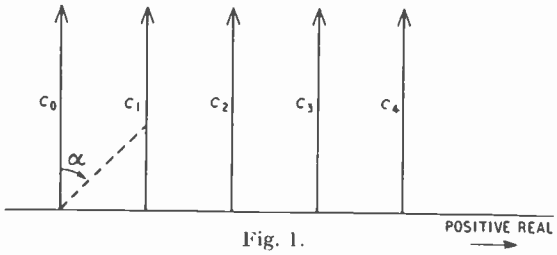

Fig. 1.

Let Fig. 1 be the upper ($p = \mu + j\omega$) half-plane in which are drawn directed vertical straight lines c_0, c_1, c_2, etc. representing constant values of μ and values of ω increasing from 0 to $+\infty$. Let the directed contours C_0, C_1, C_2, etc. (Figs. 2 and 3) correspond in the $F(p)$ or $T(p)$-plane to the contours c_0, c_1, c_2, etc. in the p-plane, if $F(p)$ or $T(p)$ is used as an analytical function of p for a conformal transformation. Figs. 2 and 3 refer to

two different networks selected as examples. No imaginary axes are drawn in order to keep the figures more universal for the discussion. The equality of corresponding angles α (Figs. 1–3) in a conformal transformation requires that if the contour c_1 in Fig. 1 is on the right-hand side of the directed contour c_0, the contour C_1 in Figs. 2 and 3 must be on the right-hand side of the directed contour C_0, etc. Noteworthy features of the changes of the curves C_n in Figs. 2 and 3 that occur when increasing the value of n are:

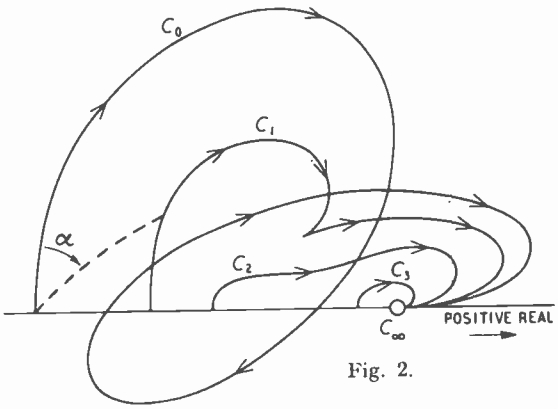

Fig. 2.

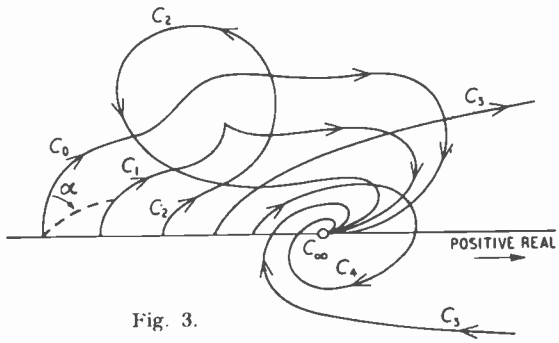

Fig. 3.

(a) A double clockwise loop C_0 in Fig. 2 changes first into a simple clockwise loop C_1 with a cusp on its right-hand side, and later into simple clockwise loops C_2, C_3, etc.

(b) A simple clockwise loop C_0 in Fig. 3 changes first into a simple clockwise loop C_1 with a cusp on its left-hand side, then into a double loop C_2 which is partly clockwise and partly anticlockwise, later into a loop C_3 reaching to infinity, and further into a double clockwise loop C_4.

Any passing of a curve C_n through the critical point (i.e., the origin in the $F(p)$-plane or the point '1' in the $T(p)$-plane) corresponds to instability of the network. Any reaching to infinity of a contour C_n (C_3 in Fig. 3) corresponds to a pole of the function $F(p)$ or $T(p)$. For a very high positive value of μ (i.e., a straight line very far to the right-hand side in Fig. 1) the corresponding curves in Figs. 2 and 3 must be very close to the point C_∞, even if the analytical expression for $F(p)$ or $T(p)$ gives a different value, because unwanted shunt capacitances and series inductances leading to $T(\infty) = 0$ or $F(\infty) = 1$ prevent any transmission through a network at sufficiently high frequencies.

Any of the curves c_n in Fig. 1 can be imagined as the curve for $\mu = 0$. Then the corresponding curve C_n in Figs. 2 and 3 is the Nyquist plot. A study of Figs. 2 and 3 and the consideration that the features (a) and (b) can occur independently several times at different positions lead to the following extension of Nyquist's Criterion, which is a combination of the theorems on pages 149 and 158 of Bode's book:

"A single- or multiple-loop feedback amplifier is stable if the Nyquist plot for a suitably selected valve does not encircle the critical point in clockwise direction and does encircle it in anti-clockwise direction as many times as there are poles of the return ratio $T(p)$ or return difference $F(p)$ in the right-hand side half plane of p. Otherwise the amplifier is unstable."

L. TASNY-TSCHIASSNY

Electrical Engineering Department,
University of Sydney,
Australia.

5th January 1955.

[1] O. P. D. Cutteridge, "Nyquist's Criterion", *Wireless Engineer*, October, 1954, Vol. 31, p. 274. See also *Wireless Engineer*, November 1954, Vol. 31, p. 293.

[2] H. W. Bode, "Network Analysis and Feedback Amplifier Design" (D. van Nostrand, 1945).

[3] L. Tasny-Tschiassny, "The Return-Difference Matrix in Linear Networks", Monograph No. 60, Institution of Electrical Engineers, London (April 1953).

Optimum Element Spacing of Uniform Broadside Arrays

SIR,—The total power radiated from an array of n elements may be expressed[1] as

$$P_1 = \tfrac{1}{2} \sum_{i=1}^{n} \sum_{j=1}^{n} I_i \; I_j \; R_{ij}$$

where I_i and I_j are the currents in the ith and jth elements respectively, and R_{ij} is the mutual radiation resistance if $i \neq j$, or the radiation self-resistance is $i = j$. In the case where all the array elements are fed with equal and in-phase currents, then $I_i = I_j = I_0$ and we have

$$P_1 = \tfrac{1}{2} \; I_0^2 \sum_{i=1}^{n} \sum_{j=1}^{n} R_{ij}$$

If the elements are identical and are so arranged that they are either collinear with a straight line (collinear array) or co-planar and perpendicular to the straight line joining their centres (curtain array), then the directivity

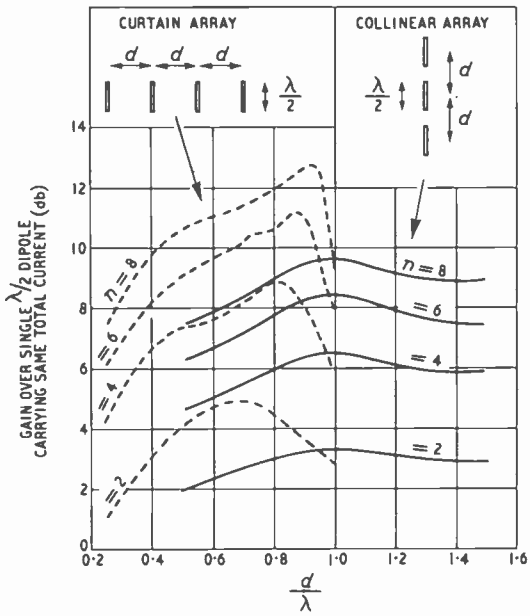

gain of the array over a single element carrying the same total current is given by the ratio

$$G = P_1/P_0$$

where $P_0 = \frac{1}{2}(nI_0)^2 R_{11}$ is the power radiated by the reference element radiator carrying a current of nI_0.

Such gain of the collinear array and the curtain array, each containing n evenly-spaced, thin half-wavelength dipoles, are calculated and plotted against element spacing for $n = 2$, 4, 6 and 8 in the figure.

The results seem to indicate that one wavelength is the optimum spacing for a uniform collinear array irrespective of the number of elements, while the optimum spacing for a uniform curtain array, depends on the number of elements and follows roughly an empirical relation

$$d/\lambda \approx 0{\cdot}6 + \tfrac{1}{3}\log_{10} n$$

The latter seems to be different from the results obtained by Hammond[2] who, using another method of attack, has given a set of curves indicating that three-quarter wavelength is the optimum spacing for a uniform curtain array irrespective of the number of elements.

RICHARD F. H. YANG

Andrew Corporation,
Chicago, U.S.A.
13th January 1955.

[1] S. A. Schelkunoff, H. T. Friis, "Antennas, Theory and Practice", John Wiley & Sons, 1952, p. 162.
[2] P. Hammond, "Power Gain of Curtain Arrays of Aerials", *Wireless Engineer*, 1953, Vol. 30, p. 108.

Diode Rectifiers

SIR,—In his paper on "Shunt-diode Rectifier in Voltage Measurement" (February 1955) Mr. Scroggie mentions some approximate methods of calculating the voltage rectification efficiency when the time-constant RC of the load is finite. An exact solution of this problem was published some years ago (*Wireless Engr*, May 1949, Vol. 26, p. 166). The results were presented in the form of a set of graphs showing the percentage decrease in the rectified voltage produced by making X/R greater than zero. ($X = 1/\omega C$)

Although the problem is not one which lends itself readily to analytical approximation, an empirical formula can easily be obtained from these graphs. This is

$$D = 120\,(X/R)^2\,(R/R_d)^{2/3},$$

where D is the percentage reduction in the rectified voltage due to the finite value of X, and R_d is the diode resistance. This expression is a fair approximation when D lies between 0·5 and 2·0, and for a range of R/R_d from 100 to 1,000. For values of R/R_d between 10 and 100 the accuracy is still sufficient for most design purposes.

In the limiting case where $R_d \to 0$ it can be shown by straightforward methods that $D = 100\pi\, X/R$, provided X/R is small, but very large values of R/R_d are required to make this approximation valid.

A. S. GLADWIN

Dept. of Electrical Engineering,
University of Sheffield.
11th February 1955.

NEW BOOKS

Handbook of Microwave Measurements

Edited by M. WIND and H. RAPAPORT, Vol. 1, pp. 616 + xiii; Vol. 2, pp. 320 + xxi. Polytechnic Institute of Brooklyn, Brooklyn, N.Y., U.S.A.

This 900-page, 2-volume handbook has been prepared by members of the staff of the Polytechnic Institute of Brooklyn under contract for the U.S. Signal Corps Engineering Laboratories, and is addressed to the radio or radar technician. Despite having been prepared primarily for Service use it is almost free from explicit references to specific items of Service equipment, although it is often obvious that it is written with such items very much in mind. For example, in the section on wavemeters it is stated—"The coaxial type covers the range from 450 to 10,500 Mc/s and the circular waveguide (cylindrical cavity) type from about 1,000 to 40,000 Mc/s".

The range is comprehensive and up to date, including sections on such things as measurement of breakdown voltage, spectrum analysis, and measurements on hybrid junctions and directional couplers.

Each type of measurement is subdivided into the different possible methods, and the procedures are given in step-by-step form. Thus, the book tends to resemble a collection of Service instruction manuals and the arrangement results in considerable repetition, rather tiresome when it includes such instructions as—"Turn the 'on/off' switch to the 'on' position and the 'sensitivity' control to the maximum position if either has been included in the equipment". But this is not to be taken as the level of the treatment, for although the information is mainly procedural it is full and accurate. Each chapter includes a useful descriptive and theoretical introduction, but no attempt is made to derive any but the simplest expressions. An excellent feature is the large number of worked calculations from measured data.

The text is confined to Volume 1 and is lithoprinted from typescript; Volume 2 contains the diagrams. This arrangement no doubt aids in keeping down production costs, but two open quarto volumes make an unwieldy handful.

For the technician the book is a useful compendium of microwave measurement methods not readily available elsewhere, but also for the engineer or physicist engaged in measurement it will be a valuable supplement to the more usual theoretical treatments of the subject.

H. R. L. L.

Introductory Circuit Theory

By ERNEST A. GUILLEMIN. Pp. 550 + xxv. Chapman & Hall Ltd., 37 Essex Street, London, W.C.2. Price 68s.

The author is Professor of Electrical Communication at the Massachusetts Institute of Technology and is well known for his work on circuit theory. In his very long preface, he most clearly describes the aim of the book and he points out that it is the first volume of a projected sequence of three or four. It is in this sense that this book is 'introductory'; considering it by itself, most people would classify it as fairly advanced.

It is intended for "a first course in circuits for undergraduate students majoring in electrical engineering or for physics students who need a good orientational background in the subject". The treatment, however, is unorthodox, for the start is not with Kirchhoff's laws, but with network geometry and network variables. This first chapter is full of nodes, branches, trees, meshes, mazes, etc., and it is intended to show how it is possible to choose a necessary and sufficient number of currents or voltages completely to describe the behaviour of any network. This it does in a very systematic and complete manner.

To one who has been brought up on more orthodox lines and has, to some extent, grown up with the subject, this treatment just seems to be creating difficulties for

the beginner. It may be, however, that this impression is wrong for, with the passage of time, one is apt to forget one's initial troubles in learning a subject. It would be an interesting experiment to compare the progress of two similar batches of students taught by the different methods.

What is certain, however, is that the engineer who is already advanced in circuit analysis will find this initial chapter quite difficult, not because of any essential difficulty in the ideas, but because of the unfamiliar nomenclature which must be memorized. This nomenclature is not a new invention of the author's, it is one which has grown up in the U.S.A. in recent years and will be familiar to those who have followed the more advanced publications in circuit theory. To others, however, it makes life difficult, for one has continually to remember that a 'node' is not a point of zero potential, as we have been brought up to believe, but a junction point at which two or more circuit elements may be or are connected. Then, it is hard to keep in mind that a 'branch' is the connection between two nodes and, hence, a circuit element, for most people consider a branch as being some sub-section of the complete network which may be only a single element but is more usually some subsidiary collection of elements.

When one has surmounted the difficulties of the first chapter, the rest of the book is comparatively straightforward. The author explains things most clearly and the only criticism of the presentation that one can make is of the author's tendency to introduce determinants and matrices. They are, however, explained and are not so numerous that they present a serious obstacle to anyone unfamiliar with them.

The approach to steady-state a.c. theory is via the transient response. This is most unusual but the unorthodoxy is, this time, one with which the reviewer fully agrees. As the author says, it does remove some of the difficulties and misconceptions of the ordinary approach, and it is not at all hard.

It is a good point that power relations are kept well to the fore. The complex frequency plane is introduced about half-way through the book and is very clearly explained.

The circuits actually treated in this book are all of fairly simple types and their treatment is mainly in illustration of the methods of analysis. Throughout, this is the end in view, to show how to analyse circuits. The book does this remarkably well and should be invaluable to the serious student. It is not a reference book, as the author himself says, and would not be of much use to the type of 'reader' who wants to dip into it to find a quick answer. W. T. C.

Soft Magnetic Materials for Telecommunication

Edited by C. E. RICHARDS and A. C. LYNCH. Pp. 346 + viii. Pergamon Press Ltd., 242 Marylebone Road, London, N.W.1. Price 63s.

A record of the papers presented at a symposium held at the Post Office Engineering Research Station in April, 1952.

Studio Engineering for Sound Broadcasting

By members of the Engineering Division, British Broadcasting Corporation. Pp. 208. Published, by arrangement with the B.B.C., for *Wireless World* by Iliffe & Sons Ltd., Dorset House, Stamford Street, London, S.E.1. Price 25s.

Selenium

By R. ASHTON, M.A., B.Sc., A.R.I.C., E. G. HILL, B.Sc., and D. NEVILL-JONES, M.A., B.Sc. Pp. 29 + iv. H.M. Stationery Office, Kingsway, London, W.C.2. Price 1s. 6d.

Mass Spectrometry

By A. J. B. ROBERTSON, M.A., Ph.D. Pp. 135. Methuen & Co. Ltd., 36 Essex Street, London, W.C.2. Price 8s. 6d.

Valves for A.F. Amplifiers

By E. RODENHUIS. Pp. 147 + viii. Philips' Technical Library, Popular Series, Cleaver Hume Press Ltd., 31 Wright's Lane, Kensington, London, W.8. Price 10s. 6d.

Radio and Television Engineers' Reference Book

Edited by E. MOLLOY and W. E. PANNETT, A.M.I.E.E. Pp. 1560 + xx. George Newnes Ltd., Southampton Street, London, W.C.2. Price 70s.

Magnetic Alloys and Ferrites

Edited by M. G. SAY, Ph.D., M.Sc., M.I.E.E. Pp. 200. George Newnes Ltd., Southampton Street, London, W.C.2. Price 21s.

Single Sideband for the Radio Amateur

Pp. 176. American Radio Relay League, West Hartford 7, Connecticut, U.S.A. Price $1.75.

Les Fonctions de Bessel (2nd Edition)

By GEORGE GOUDET. Pp. 90. Masson et Cie., 120 Boulevard Saint-Germain, Paris 6e. Price 600 fr.

Exercices et Problèmes de Radioélectricité à l'usage de l'Ingénieur

By G. BASSERAS. Pp. 263. Éditions Eyrolles, 61 Boulevard Saint-Germain, Paris 5e. Price 2250 fr.

Théorie des Réseaux de Kirchhoff

By M. BAYARD. Pp. 408. Éditions de la Revue d'Optique, 165 rue de Sevres, 3 et 5 Boulevard Pasteur, Paris 15e. Price 3200 fr.

British Plastics Year Book 1955 (25th Edition)

A Classified Guide to the Plastics Industry. Pp. 652. Iliffe & Sons Ltd., Dorset House, Stamford Street, London, S.E.1. Price 30s.

Transactions of Chalmers University of Technology

No. 149. "A Theoretical Investigation of the Ionospheric Electron Density Variation during a Solar Eclipse", by O. E. H. Rydbeck and H. Wilhelmsson. Pp. 22. Price Kr. 3.50.

No. 155. "The Interaction between an Obliquely Incident Plane Electromagnetic Wave and an Electron Beam", by Hans Wilhelmsson. Pp. 30. Price Kr. 7.

No. 156. "Electromagnetic Wave Propagation on Helical Conductors imbedded in Dielectric Medium", by Sven Olving. Pp. 14. Price Kr. 3.

No. 157. "Amplification of the Traveling Wave Tube at High Beam Current", by Sven Olving. Pp.10. Price Kr. 3.

The foregoing are all in English and are obtainable from Chalmers Tekniska Högskolas Bibliotek, Göteborg, Sweden.

TECHNICAL LITERATURE

Marconi Instruments 1955 Catalogue of Telecommunication Measuring Equipment and Industrial Electronic Instruments

Pp. 225 + x. Available on request to senior engineers and executives. Marconi Instruments Ltd., St. Albans, Herts.

Mond Carbonyl Iron Powders

Pp. 50. Mond Nickel Co Ltd., Publicity Department, Thames House, Millbank, London. S.W.1.

Electrical Standards for Research and Industry
Pp. 204. The 1955 catalogue of H. W. Sullivan Ltd., Peckham, London, S.E.15.

Ten Years of Semi-Conducting Materials and Transistors
Pp. 38. A bibliography of the literature compiled by the Research Department of Pye Ltd., Cambridge.

BRITISH STANDARDS

Resin-Cored Solder Wire 'Activated' and 'Non-Activated' (non-corrosive)
B.S.441:1954. Price 3s.

Unified Thread Taps
Addendum to B.S. 949. P.D. 2061 : 1954. Price 7s. 6d.

Fine Resistance Wire for Telecommunication and Similar Purposes
B.S. 1117 : 1955. Price 2s.

Sizes of Manufacturers' Trade and Technical Literature (including recommendations for contents of catalogues)
B.S. 1311 : 1955. Price 2s. 6d.

Basic Climatic and Durability Tests for Components for Radio and Allied Electronic Equipment
B.S. 2011 : 1954. Price 5s.

British Standards Institution, 2 Park Street, London, W.1.

NATIONAL BUREAU OF STANDARDS

Tables of the Gamma Function for Complex Arguments
Applied Mathematics Series 34. Pp. 105. Price $2.
The table gives real and imaginary parts of $\log_e \Gamma(z)$ for $z = x + iy$, $x = 0(\cdot 1)10$, $y = 0(\cdot 1)10$ each to 12 decimals. It also gives $\sin \pi x$, $\cos \pi x$, $\sinh \pi x$ and $\cosh \pi x$ to 15 decimal places or 15 significant figures for $x = 0(\cdot 1)10$.

Tables of Sine and Cosine Integrals for Arguments from 10 to 100.
Applied Mathematics Series 32 (re-issue of Mathematical Tables 13). Pp. 186. Price $2.25.
This table is of $\mathrm{Si}(x)$ and $\mathrm{Ci}(x)$ for $X = 10(\cdot 01)100, 10D$. Auxiliary tables give multiples of $\pi/2$, $(\frac{1}{2}p)(1 - p)$, $p(1 - p^2)/6$ and $q(1 - q^2)/6$ where $p + q = 1$.

Cheyenne Mountain Tropospheric Propagation Experiments
By A. P. Barsis, J. W. Herbstreit and K. O. Hornberg. Circular 554. Pp. 39. Price 30 cents.

Contributions to the Solution of Systems of Linear Equations and the Determination of Eigenvalues
Edited by Olga Taussky. Applied Mathematics Series 39. Pp. 139. Price $2.
National Bureau of Standards. Government Printing Office, Washington 25, D.C., U.S.A.

MEETINGS

I.E.E.

20th April. "A Study of the Long-Term Emission Behaviour of an Oxide Cathode Valve", by G. H. Metson, M.C., Ph.D., M.Sc., B.Sc.(Eng.).
21st April. "Transistor Physics", Kelvin Lecture by W. Shockley, B.Sc., Ph.D.
22nd April. "Technical Training in North-West Germany", discussion to be opened by K. R. Sturley, Ph.D., B.Sc., at 6 o'clock.
2nd May. "A Simple Introduction to Telegraph Codes", informal lecture by H. V. Higgitt.
These meetings will be held at the Institution of Electrical Engineers, Savoy Place, Victoria Embankment, London, W.C.2, and will commence at 5.30, except where otherwise stated.

BRIT.I.R.E.

13th April. "The B.B.C. V.H.F. F.M. Sound Broadcasting Service", discussion to be opened by Dr. K. R. Sturley and F. T. Lett.
27th April. "Suppressed Aerials for the Aircraft H.F. Band", by K. J. Coppin.
These meetings will commence at 6.30 at the London School of Hygiene and Tropical Medicine, Keppel Street, Gower Street, London, W.C.1.

SOCIETY OF INSTRUMENT TECHNOLOGY

26th April. "Magnetic Amplifiers as Industrial and Laboratory Aids", by R. J. Russell-Bates, to be held at Manson House, Portland Place, London, W.1, at 7 o'clock.

STANDARD-FREQUENCY TRANSMISSIONS

(Communication from the National Physical Laboratory)

Values for February 1955

Date 1955 February	Frequency deviation from nominal: parts in 10^8		Lead of MSF impulses on GBR 1000 G.M.T. time signal in milliseconds
	MSF 60 kc/s 1429-1530 G.M.T.	Droitwich 200 kc/s 1030 G.M.T.	
1	−0·7	+4	+61·2
2	−0·6	+1	+60·8
3	0·6	+2	+60·5
4	−0·5	+2	+59·9
5	0·5	+2	NM
6	−0·5	+3	NM
7	−0·6	+2	+58·7
8	−0·6	+2	+57·6
9	0·6	+2	+57·5
10	0·5	+3	+57·0
11	0·5	+3	NM
12	NM	+5	NM
13	NM	+5	NM
14	−0·5	+5	+55·1
15	−0·4	+5	+54·7
16	−0·5	+1	+54·3
17	−0·5	+1	+54·0
18	−0·5	+1	+53·7
19	NM	+1	NM
20	−0·5	+1	+52·8
21	−0·5	+2	+53·5
22	−0·5	+2	+51·8
23	−0·5	+2	+51·7
24	−0·5	+3	+51·5
25	−0·4	+2	+51·1
26	NM	+2	NM
27	−0·4	+1	+49·9
28	−0·4	+2	+49·4

The values are based on astronomical data available on 1st March 1955.
The transmitter employed for the 60-kc/s signal is sometimes required for another service

NM = Not Measured.